Premier 210 electricity meter with RS-232/ NIC 5 communication module

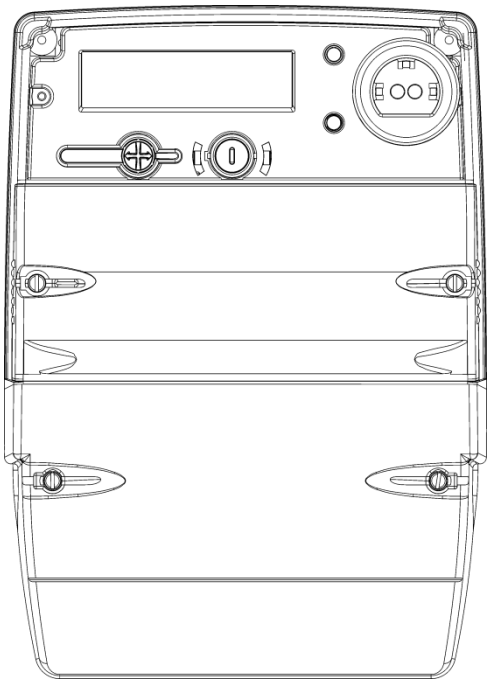

Installation Manual

BGX701-076-R06

Commercial and Confidential

© 2018-2021, SIHPL. All rights reserved. E&OE.

Premier 210® and Skyline-i 543/033® are registered trade names of Secure Meters Ltd.

Other product names are trademarks or registered trade names of their respective owners.

As part of Secure Meter's continuous endeavour to improve product design, specifications mentioned are liable to change.

Table of Contents

Important **5**
Disclaimer **6**
Precautions and Safety Practices **7**
Commonly Used Acronyms **8**
1 Introduction **10**
1.1 About Premier 210 10
1.2 Premier 210 Technical Specifications 11
1.3 Handling, storage and operating conditions 14
1.4 Premier 210 Parts 15
1.5 Symbols printed on the front cover 17
1.6 Dimensions and mounting arrangements 18
2 Premier 210 Display and Button Details **22**
2.1 Using the display 24
2.1.1 Display types and viewing arrangements 24
3 Engineering Menu **26**
3.1 Energy Channel Configuration for Metro LED 26
3.2 Phase Configuration 28
3.3 MD Reset 29
3.4 Contactor Test (for LC Switch) 29
3.5 Test Mode 30
3.6 Tariff Activation 32
3.7 Antenna switching 33
4 Installation and mounting details **35**
4.1 Lifting the meter 35
4.2 Precautions & safety practices 38
4.3 Quick start 38
4.3.1 Getting started 38
4.3.2 Installing the Meter (only by experienced staff) 38
4.4 Pre-installation checklist 39
4.4.1 Tools and accessories 39
4.4.2 Selecting an appropriate mounting location 39
4.4.3 Selecting suitable mounting screws 39
4.4.4 Selecting the cable 40
4.5 Installation procedure 40
4.5.1 The groundwork 40
4.5.2 Mounting the meter 41
4.5.3 Preparing cables for termination 42

4.5.4 Making connections 43
Appendix 1. LCD Display 46
Appendix 2. List of Display Flags and Corresponding Meter States 55
Appendix 3. Phase Icon Indicators 56
Appendix 4. Fitting an External Antenna 57
Appendix 5. Replacing the Communication Module 59
Appendix 6. Opening and Fitting the Secondary Terminal Cover 61
5 Notes 64

Important

As part of Secure Meters continuous endeavour to improve product design, the specifications mentioned in this manual are liable to change anytime and therefore availability of features is product build specific.

Specifications / features listed in this document are the most advanced available with Secure Meters on the date of release of this document, and hence should not be considered as default. Availability of all or some of the same depends upon the product builds and may not be readily available. Sales team should be contacted for queries, if any.

No part of the manual, or its content thereof, must be published, distributed, scanned or copied, in either electronic form or otherwise, without prior information and express consent of Secure Meters.

While all efforts have been made by Secure Meters to minimize errors, some errors may inadvertently exist. Secure Meters undertake to correct such errors wherever possible, and request feedback from users in this regard.

Secure Meters reserve the right to alter some or whole of the specifications mentioned in this document without any prior notice.

For any queries or clarifications, the user is requested to email the Secure Meters' support team at au.tech.support@securemeters.com

In most countries, electrical installations comply with more than one set of regulations issued by National Authorities or by recognized local or international bodies. Such regulations must be adhered to, even if they are not referred to directly in this document.

Secure Meters have duly conducted product quality tests as per regulations based on the observance of rigorous safety rules in the design and realization of the product.

In order to prevent tampering, the meter should be appropriately sealed after installation. Inappropriate handling of the seal may cause damage to the meter thus creating a false impression of being tampered with.

Please take note of the warning and caution icons presented in this manual as follows:

Possible Electric Hazard

This icon indicates the existence of dangerous electrical voltage. These operations must only be performed by qualified personnel.

Caution

This icon warns the user to take special precautions whilst performing an operation. The procedure must be followed as described in the manual.

Disclaimer

Secure Meters assume no responsibility for damage caused to the meter under the following circumstances:

- Irregular maintenance / improper installation
- Imprudence or carelessness during installation
- Normal (or abnormal) wear and tear of insulation
- Accidental contact with hazardous elements
- Immersion of meter in water
- Handling of meter by unauthorised persons
- Handling of meter by inebriated persons

Precautions and Safety Practices

- This product must be installed and serviced only by trained personnel. We strongly recommend reading the “Premier 210 installation manual” thoroughly before installing the product.
- Energy meters are generally installed in electrically hazardous areas. To minimise the risk of electrical shock, stay away from loose or exposed electrical connections. If there is loose or exposed electrical wiring near the meter, initiate appropriate preventive measures.
- Premier 210 meter should be installed outdoors but should be protected from extreme weather conditions.
- The electrical installation of electronic meters at a site requires an adequate understanding of all governing rules and regulations.
- Keep the meter away from fire, rain and direct exposure to water.
- The meter may be damaged, either in part or completely, if it falls from a height.
- It is recommended to immediately cut off the electricity supply upon occurrence of a fault within the meter.
- Ensure that the load does not exceed the current range specified on the rating plate.
- Ensure that the mains supply is turned off before making connections.
- Appropriate fuses and circuit breakers must be used in accordance with the rating of the meter.
- Secure Meters recommend regular installation checks to be carried out, especially when product is installed at locations posing high risk of degradation or corrosion, such as under direct strong sunlight, areas with high ambient temperature and little ventilation, areas near heat sources such as a furnace, areas where the meter is regularly exposed to chemical fumes, etc.
- When enabling the external antenna always ensure that it has been plugged into the SMA connector under the module.
- To ensure optimal performance of the radio system with the meter, the radio antenna must be fitted externally if the meter (or modem) is installed inside a metal enclosure.
- Always refer to installation & associated documentations and follow the instruction and the practices described. Manual should be strictly referred for details wherever the caution symbols are used on the product.
- If the meter is not used in the manner specified in the manual, the protection provided by the meter may be impaired.
- Safety practices must be followed as open position of the supply does not provide isolation from the mains network.
- The installer is responsible for coordinating the rating and the characteristic of the supply side over current protection devices to the maximum current rating of the metering equipment. Refer section **Error! Reference source not found.** for details. User is not allowed to connect any protection devices.
- Do not use solvents or abrasive materials to clean the meter, use only a soft and dry cloth and isolate the meter from the supply before cleaning it.
- Premier 210 is maintenance-free meter as it has no interchangeable or serviceable parts. To ensure a robust user experience, adhere to the environmental and technical specifications; and follow the instructions and safety measures to avoid risk of injury or damage to the equipment. For any further queries, you may contact the nearest sales representative.

Commonly Used Acronyms

Acronym	Description
ETBC	Extended Terminal Block Cover
ANSI	American National Standard Institute
RJ-45	Registered Jack 45
NMS	Network Management System
O/P	Output
NIC	Network Interface Card
PC-FR	Fire Retardant- Poly Carbonate
LCD	Liquid Crystal Display
P-N	Phase-Neutral
LED	Light Emitting Diode
SMA	Sub-Miniature version A
STOU	Seasonal Time Of Use
DIP	Demand Integration Period
PCB	Printed Circuit Board
LAN	Local Area Network
WAN	Wide Area Network
HAN	Home Area Network
HES	Head end system
ID	Identity
CIP	Consumer Interface Panel
TOU	Time Of Use
MD	Maximum demand
SIP	Survey Integration Period
QoS	Quality of Supply

Acronym	Description
CT	Current Transformer
IHD	In-Home Display
IEC	International Electro-technical Commission
BCS	Base Computer System
I/O	Input Output
UTRN	Unique transaction reference number
UART	Universal asynchronous receiver/ transmitter
AP	Access point
Eng	Engineering
RMR	Remote Meter Reading
DLMS	Device Language Message Specification
OBIS	Object Identification System

1 Introduction

This manual is intended for understanding the various functions of Premier 210 and how to use its available features.

Broadly, the manual covers information about the available product builds, general technical specifications, details about the various applications and features, the configuration process both from the meter's Setup Mode (push buttons) and using M-Cubed, the various displays supported by the meter and Appendices on useful information.

1.1 About Premier 210

Premier 210 is a three phase, single element CT operated meter with fixed CT ratings. It supports credit mode of operation for Smart Metering. The meter supports 230/240V (+20%/– 20%) connection with the current of 5-20A. It has a relay of 2 Ampere and two fixed pulse outputs, one for Active Import and other for Reactive Import. It is used with optional RS-232/ NIC 5 communication module.

The communication module sits on front belly of the meter cover. It serves as the communication gateway to the Head End System (HES) via a Wide Area Network (WAN).

The modular communication design provides the flexibility to upgrade or change the meter's communication technology without the need to remove the meter or break metrological seals. The communication module connects the meter to HES over NIC 5 Mesh protocol. This communication provides remote data transfer between the meter and HES either as per the request or according to the schedule. The optional Zigbee module connects the communication module with other HAN devices –In Home Display (IHD).

It has an ANSI optical communication port for local communications and a user interface consisting of two push buttons which allows the user to select and display the data.

Commands or changes of configuration can be delivered to the meter in the form of authorised messages or UTRNs. UTRNs are encrypted codes that are valid only in the meter for which they are generated.

Relay disconnection / reconnection can be done remotely over the WAN or locally. A Mains frequency based clock or a battery-backed internal clock maintains the meter's date and time. Removal of the terminal cover and main cover is detected and logged in power-on condition.

Internal sensors monitor external magnetic fields allowing magnetic events to be logged and reported. The meter supports a maximum of two pulse outputs for calculating energy consumption. In addition, a 2A relay is integrated into the meter for demand management.

Note:

The operational scenario is similar for Skyline-i 033 except that the communication with IHDs over HAN is not supported. For Skyline- i 033 variant, any functionality, feature or step related to IHD or HAN must be ignored throughout the manual.

In this section you will learn about:

- Premier 210 technical specifications under 1.2
- Premier 210 meter parts under 1.4
- Premier 210 dimensions and mounting details under 1.6

1.2 Premier 210 Technical Specifications

S. No.	Specification	Description	
1	Mechanical	Dimensions (mm)	252 (H) x 180 (W) x 118 (D) without hook (with 35 mm extended main terminal cover)
		Weight	2.2 kg approx. (Actual weight may vary with variants)
		Mounting	Projection type
		Front cover	Translucent PC-FR grade V0
		Base	Opaque, PC-FR material
		Communication module cover	Opaque, PC-FR material
		Terminal cover	Opaque, PC-FR material
		Secondary terminal block cover	Opaque, PC-FR material
		Extended terminal block cover	PC-FR grade V0, Opaque without U cut, 35 mm from terminals
		Terminal block	Opaque 10% glass filled PC-FR grade V0, matt finish
		Rating plate	Opaque, PC-FR material
		Main load terminal screws	Screw M4*8mm (brass, nickel plated)
		Minimum bore diameter for main terminals	5.0 mm, suitable for 4 mm^2 multi-strand copper cables
		Bore Diameter of Pulse I/O	4 mm, Suitable for 2.5 mm^2 cables
		Sealing provision	• 2 seals at the back of the meter (upper screws) • 2 seals under the terminal cover • 2 seals on the terminal cover • 1 optional seal for configuration button • 2 seals on the module

		Sealing screw	Captive type, made of brass, sealing hole diameter 2mm
		Display	Super-twisted Nematic (STN) LCD with backlight
2	Electrical	Connection, Supply	3 Phase, 4 Wire, Current transformer operated
		Voltage measuring element	Voltage divider
		Current measuring element	CT
		Measuring Elements	Three
		Reference Voltage (Supply Voltage)	230 / 240V± 20%
		Reference current range	5A Ib, 20A Imax (per phase)
		Frequency	50 Hz ±5%
		Power Factor	0.5 Lag - Unity - 0.8 Lead as per IEC/AS 62053-21 for Active Energy 0.25 Lag - Unity - 0.25 Lead as per IEC/AS 62053-24 for Reactive Energy
		Accuracy	Class .5 for Active Energy Class 2.0 for Reactive Energy
		Metrology LED	Two LEDs, 5000 pulses/unit
		RJ45 port/connector	Port accessible (RS 232)
		Load control relays	230/240 VAC, 2 A (volt free) Type: PVC, V-75, Copper Size: 1 mm^2 Voltage rating: 600/1000 V Normal temperature rating: 75°C
		Pulse Output	27Vdc, 27mA (volt free) Type: PVC, V-75, Copper Size: 1 mm^2 Voltage rating: 600/1000 V

			Normal temperature rating: 75°C	
		Non-volatile memory	8 MB Flash, Data retention up to 15 years	
		Connecting Cables (Recommended -As per service and installation practices)	Type	PVC, V-90, Copper
			Size	4 mm^2 (conductor diameter) for 20A
			Voltage rating	600/1000V
			Normal temperature rating	75°C
		Communication module	Nominal Voltage: 4V(+/-0.1V) Maximum load: 1.4A (Peak)	
3	Protection	Dielectric Strength	• Withstands 415 VAC continuous • Impulse withstanding as per AS and NMI M6	
4	Compliance	Reference Standard	AS62052.11, AS62053.21, AS62056.21, AS62054.21, AS62053.24, NMI M6-1, AS62052.31	
		Lighting Interference	AS62056.21 (16k Lux under controlled conditions)	
		Environmental Protection	IP 54 with suction	
5	Environmental	Storage Area	The meter is designed for indoor(/outdoor)* use, in accordance with IEC 60721-3-3:1996. *Ideally the meter should be stored and operated in a dry, well ventilated, climate-controlled building. Rapid changes in temperature and humidity should be avoided.	
		Operating Temperature as per AS standard	**Range**	**Outdoor Meter**
			Specified operating range	-10 °C to +55 °C
			Limit range of operation	-10 °C to +70 °C
			Limit range for storage	-25 °C to +70 °C
			Limit range for transportation	-25 °C to +70 °C

		Operating Temperature as per NMI M6	Specified operating range	-10 °C to +60 °C
			Limit range of operation	-20 °C to +70 °C
			Limit range for storage	-25 °C to +70 °C
			Limit range for transportation	-25 °C to +70 °C
		Operating Humidity	Annual mean	< 75 %
			For 30 days, spread in a natural manner over one year	95 % (non- condensing)
			Occasionally on other days	85 %
6	Power Consumption (As per IEC 62053-61)	Voltage Circuit	< 2 W/phase and < 3.3 VA /Phase average Skyline- i 033 fitted) < 2.5 W/Phase and < 3.5 VA/ Phase (with communication)	
		Current Circuit	< 0.2 VA @ Ib/phase and < 7.5 VA @ Imax/phase as per IEC 62053-61	
7	Additional information	Altitude level	Altitude level up to 2000 m from sea level	
		Meter type	Outdoor	

1.3 Handling, storage and operating conditions

The Premier 210 meter is an electronic device containing delicate components, which should be handled carefully during transit, storage, and installation. The meter should be protected from physical vibration and shocks. Wherever possible the meter should be kept in its original packaging until it is installed at the customer's site. Temperature and humidity must be maintained within the limits expressed in the above table.

Proper installation and removal procedures should be followed, in order to prevent damage or injury. Physical damage to the meter's case could indicate damage to internal components. Under no circumstances should an attempt be made to install a damaged meter.

A visual inspection should be performed before installing the meter. The following should be checked, as a minimum:

- No evidence of external damage or missing parts
- No missing or damaged wiring
- No evidence of overheating

Ideally the meter should be stored and operated in a dry, well ventilated, climate-controlled building. Rapid changes in temperature and humidity should be avoided.

1.4 Premier 210 Parts

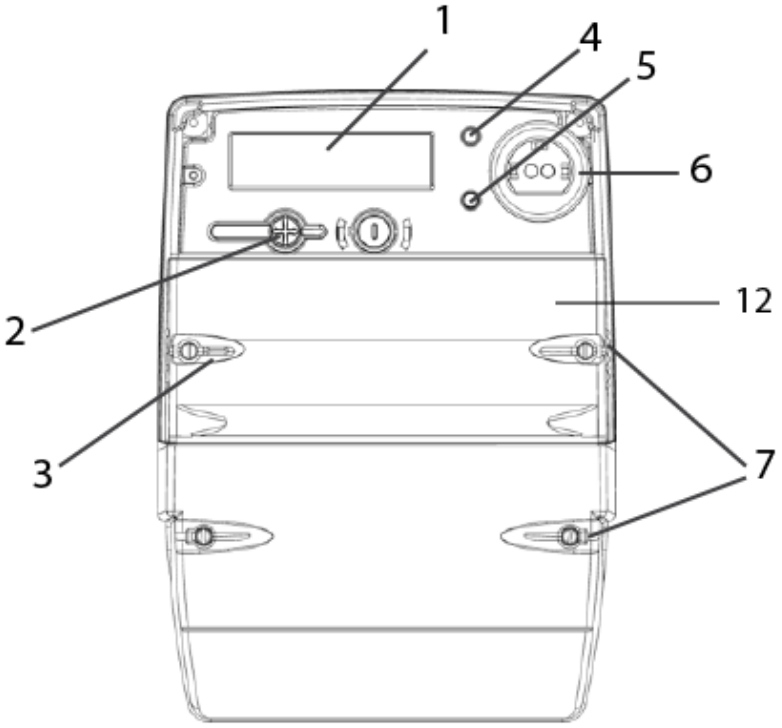

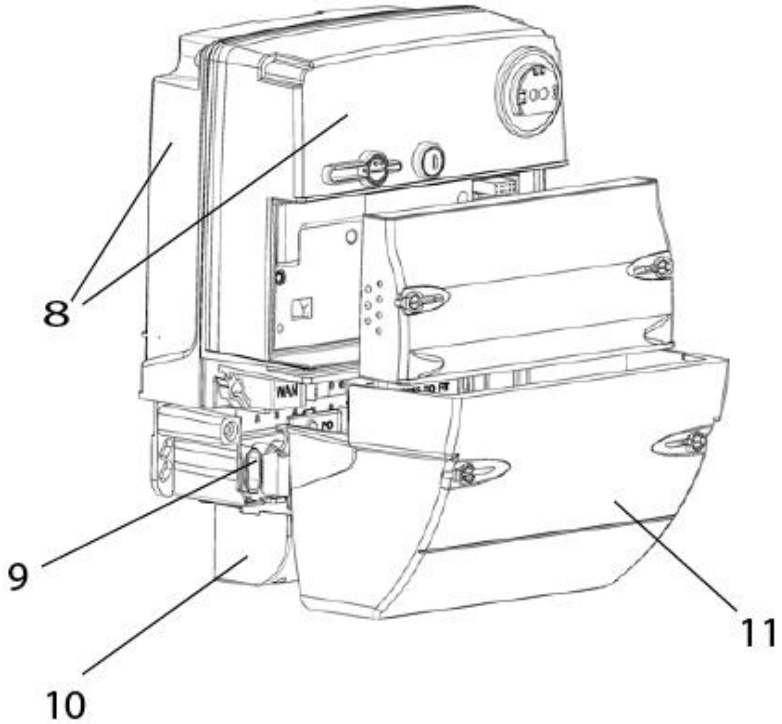

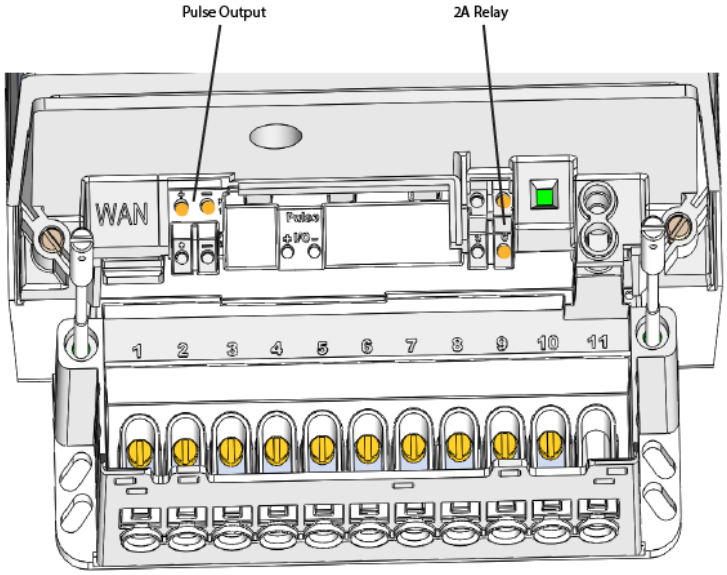

Figure 2: Premier 210 Part Details

Fixed Plate–Information is fixed and is common for all meters of this type.

1. **LCD display -** A large multi-segment LCD supporting alpha-numeric characters displays the information and values for various electrical parameters recorded by the meter.
2. **Push Buttons -** Two push buttons Left and Right, allow interactions with Premier 210. These buttons are used for various user operations such as display navigation, boost operation etc.
3. **Communication Module –** To facilitate AMI communication, Premier 210 provides a modular compartment; into which, a communication module can be fitted as required.
4. **Metrological LED (Fixed) -** This LED is provided on the meter main face plate and flashes according to the rate of energy consumption measured by the meter. It is used for testing the accuracy of the meter and as a visual indication of the rate of energy consumption.
5. **Metrological LED (Configurable) -** This LED is provided on the meter main face plate and is configurable at production for any of the four Quadrants.
6. **ANSI optical port -** An electrically isolated optical port is provided for external communication to prevent tampering / damage to the meter from spurious external electrical signals.
7. **Sealable Screws -** These screws facilitate the sealing arrangement necessary after the installation of the meter in the field.
8. **Meter Base and Front Cover -** The base or enclosure of the meter is made of a high-grade fire-retardant poly-carbonate. The front cover, made of the same material, is fastened to the base with screws. A sealing arrangement is provided to prevent tampering.
9. **Terminals and Terminal Block -** A terminal block, capable of sustaining high temperature, is provided in the meter with adequate provisions for connecting wires to the meter.
10. **Secondary Terminal Cover-** The secondary terminal cover provides additional protection for the live terminals of the meter and keeps them inaccessible even after removal of the main terminal cover.
11. **Extended Terminal Cover–**The extended terminal cover protects the terminal connections from tamper or interference, provides safety from hazards and provides security of add-on modules**.**
12. **SMA connector for external antennas -** SMA (Sub-Miniature Version A) connector is available under the module to connect a compatible external antenna (WAN and HAN) on the Premier 210.

13. **RS-232 Interface** – An optional RS232 interface for plug-in devices on an RJ45 port is provided for remote communication. This interface can be used as an alternative for remote communication when the NIC module is not being used.
14. **Pulse Output**– Pulse outputs are generally used to indicate a variety of available events or states. The meter has one 27V DC@27mA pulse output. The output will be potential free.
15. A 2A Relay is provided in the Premier 210 meter which is used for managing load control applications.

1.5 Symbols printed on the front cover

Following are the symbols available on the front cover of the meter:

Symbol	Meaning
Li	Lithium battery
	Double insulation
	RCM compliant
	Symbol for referring user and installation manual

1.6 Dimensions and mounting arrangements

This section displays the dimensions of the product in various views. The meter terminal dimensions are also provided here. Details such as possible vertical and horizontal mounting positions are included to ease the installation process.

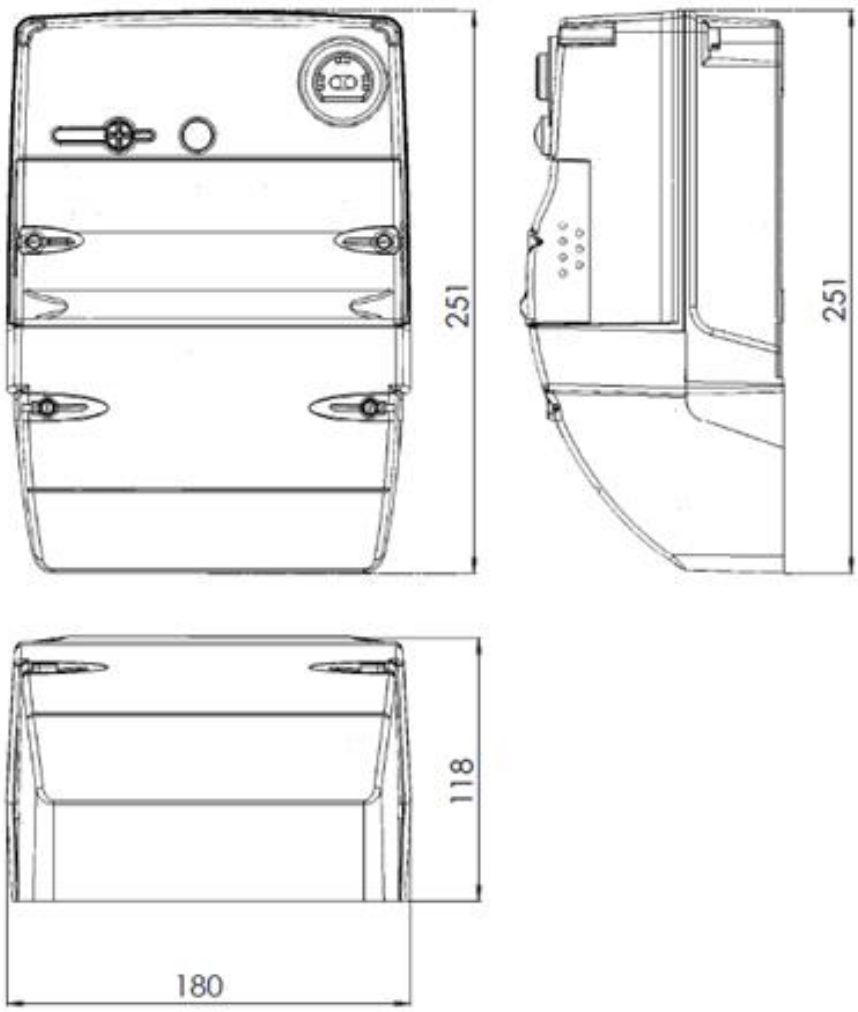

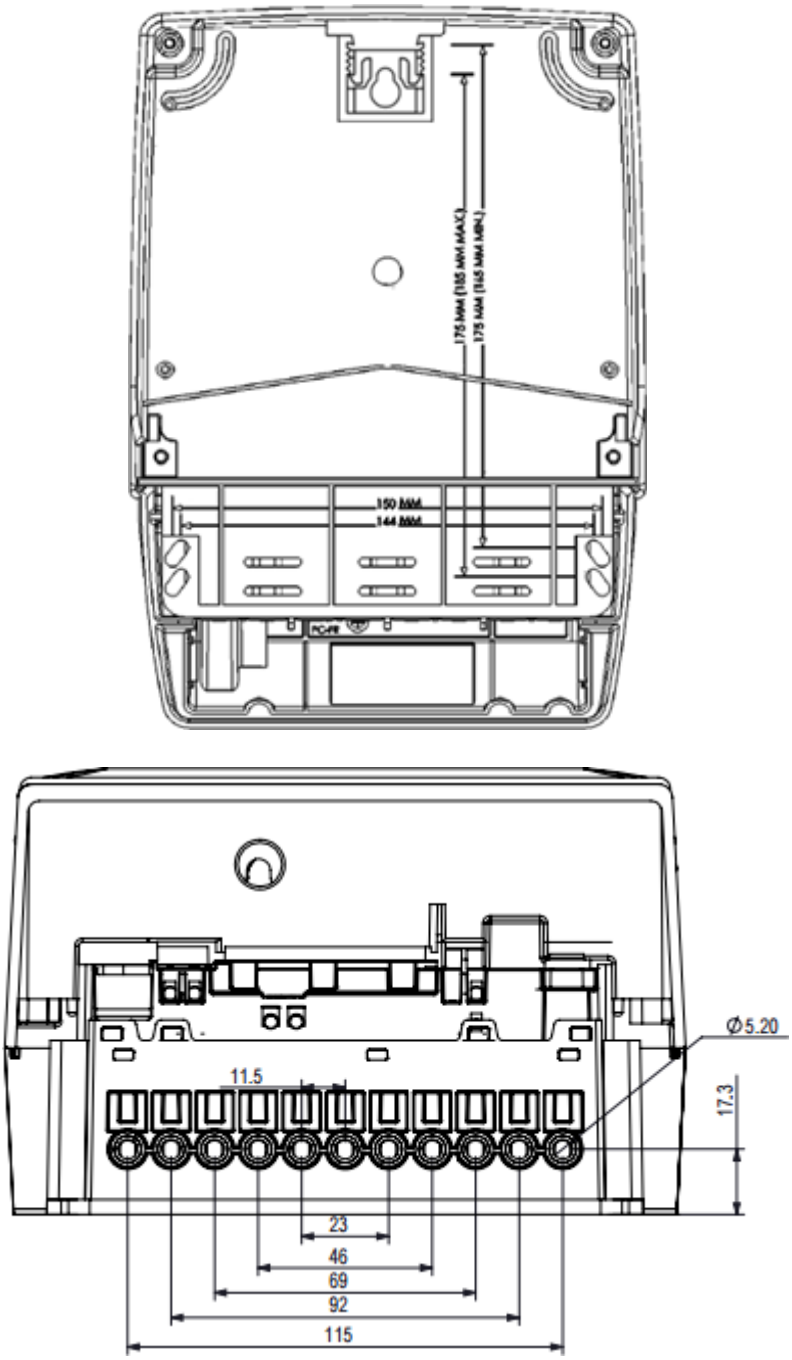

Figure 1: Terminal connections

Premier 210 supports various mounting options which include arrangements to substitute any currently installed meters too. The figure below displays the rear-view fixing dimensions in mm.

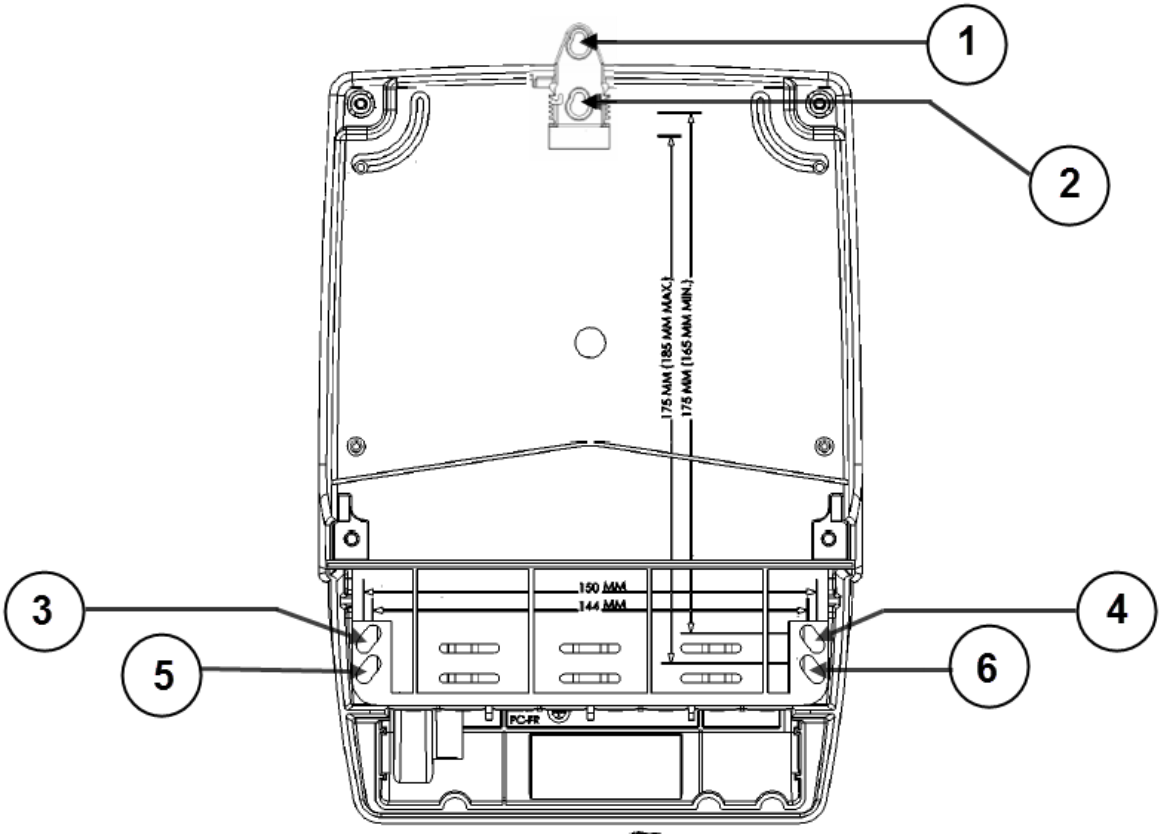

Figure 2: Dimensions and Mounting Details

All the possible mounting options are described in the table below:

Table 1: Premier 210 Mounting measurements

Options	**Mounting arrangement holes**	**Vertical distance (mm)**	**Horizontal distance (mm)**
Option 1	1, 3, 4	211	144
Option 2	2, 3, 4	175	144
Option 3	1, 5, 6	211	150

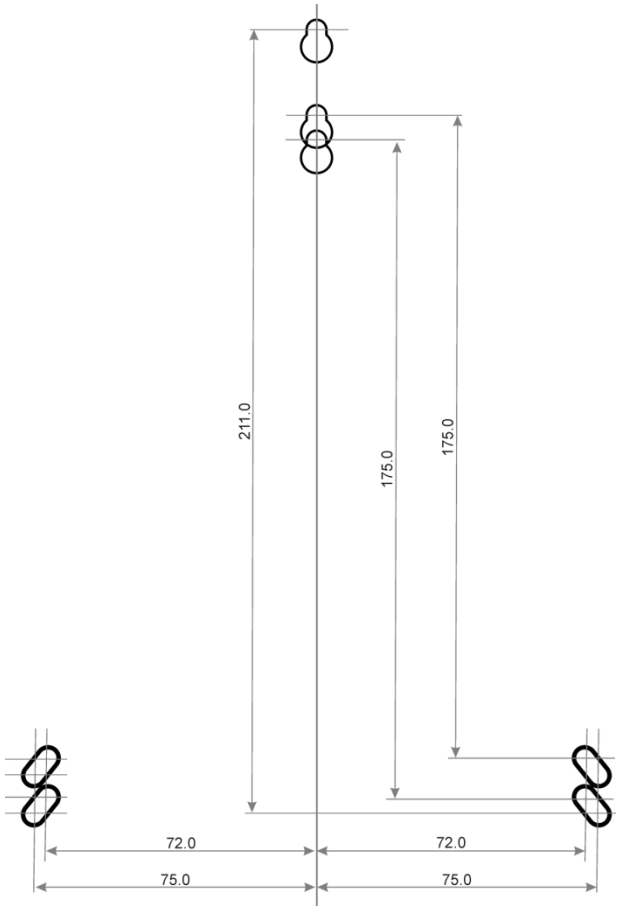

Figure 3: Mounting Arrangements

2 Premier 210 Display and Button Details

Premier 210 is equipped with a large multi-segment alpha-numeric LCD display and two buttons for the essential user interface.

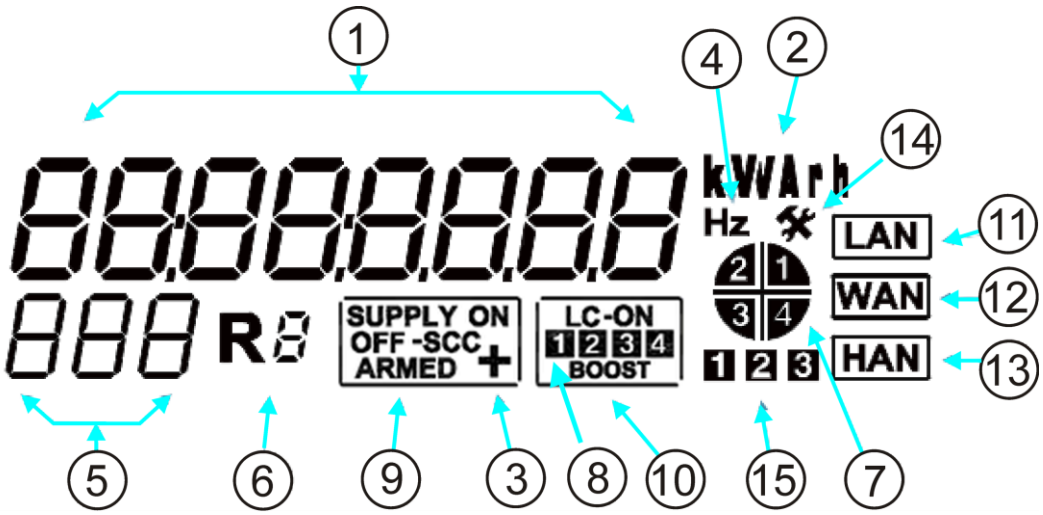

Figure 4: Segment Check for the LCD Display

The LCD screen has various sections and annunciators for displaying specific bits of information such as supply or load connection status, parameter values, user messages etc. An annunciator or a section corresponding to the demanded information is illuminated at the time of display. When powered, the LCD is capable of displaying a group of related electrical parameter values together on a single page.

For example, the relay status can be displayed simultaneously on a single display page.

Details of individual sections are summarised below:

Table 2: Premier 210 LCD segment / Annunciator details

S. No.	Icon / Segment	Details / Remark
1.	88888888	Alpha-numeric main value indicator - This segment displays the values of pre-configured parameters in an interactive mode. It also displays the health status of the meter and messages on the transactions performed with the meter.
2.	kVVArh	Unit indicators - These icons display unit values using combination of characters like k, V, W, A, r and h.
3.	+	Sensitive load indicator -This icon indicates presence of Sensitive load mode in the meter.
4.	Hz	Frequency indicator - This icon indicates supply frequency unit.
5.	888	Display code indicator - This icon indicates individual display ID assigned to each of the displayed parameter. This code allows distinction between two similar displays.
6.	R8	NOT USED

7.		Energy quadrant annunciators - glowing of a particular quadrant indicates the instantaneous information about the energy flow, as follows - 1 Active import, Reactive import, Lagging PF 2 Active export, Reactive import, Leading PF 3 Active export, Reactive export, Lagging 4 Active import, Reactive export, Leading PF
8.	LC-ON 1 2 3 4 BOOST	LC-ON 1 represents the relay state (ON/ARMED).
9.	SUPPLY ON OFF-SCC ARMED +	Supply will be permanently in ON state SCC: Not used
10.	BOOST	NOT USED
11.	LAN	NOT USED
12.	HAN	Indicates that the meter is paired or ready for pairing with the HAN device
13.		Service status mode indicator - Indicates that attention and due service by authorised personnel is needed for maintenance e.g. Real Time Clock failure.
14.	1 2 3	Phase annunciators - Indicate the presence of supply voltages at the respective phase. The annunciators also flash if reverse current is detected in any of the phase.

Table 3: Operations possible through Premier 210 push buttons

S. No.	Function	Details
1.	Parameter Navigation	Premier 210 may be configured to display a desired list of parameters. These parameters are logically grouped to appear as a different display page, each of which is assigned an individual display ID.
2.	Metrological LED configuration	The metrological LED can be configured to flash on desired energy channel using the parameter navigation function. **Note:** This is applicable only till midnight cross over, following which, it switches to the factory configured settings. The same is applicable for a power interruption.

2.1 Using the display

Two modes are available for viewing the displays in the meter:

- Push Button Mode
- Auto Mode

Push button mode

The push buttons provided on the front panel can be used to navigate through various displays, switching to a different display mode.

Table 4: Push button display mode

S. No	Button	Action
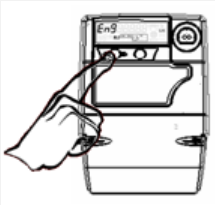	Left button	Advances to next page or display the first parameter of the next page.
	Right button	Selects the next parameter in the current page sequence

Auto mode

Auto Mode is the default mode for Premier 210 display. The configured parameters scroll automatically within a specified period. The auto cycle ends with a brief sleep mode of two minutes, following which the display cycle is repeated. Upon power interruption, the display starts in auto mode.

2.1.1 Display types and viewing arrangements

Premier 210 uses a Super Twisted Nematic (STN) type Liquid Crystal Display (LCD) which offers more contrast than normal TN types. Twisted Nematic Display is the most commonly used crystal display used in digital devices. A STN display contains a liquid crystal sandwiched between two plates of glass, which twists and un-twists at varying degrees to allow light to pass through. When no voltage is applied to a STN liquid crystal cell, the light is polarised to pass through the cell. In proportion to the voltage applied, the liquid crystal cells can twist from 180° to 270° changing the polarisation and blocking the light's path.

The example shown below illustrates how the longitudinal polarisation is twisted after passing through STN Crystal Display.

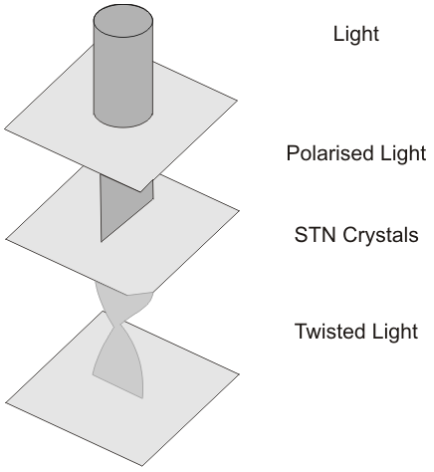

The figure below illustrates the meter display from two different positions:

Case 1: When the meter display is viewed from a level above the meter.

Case 2: When the meter display is viewed from a level below the meter.

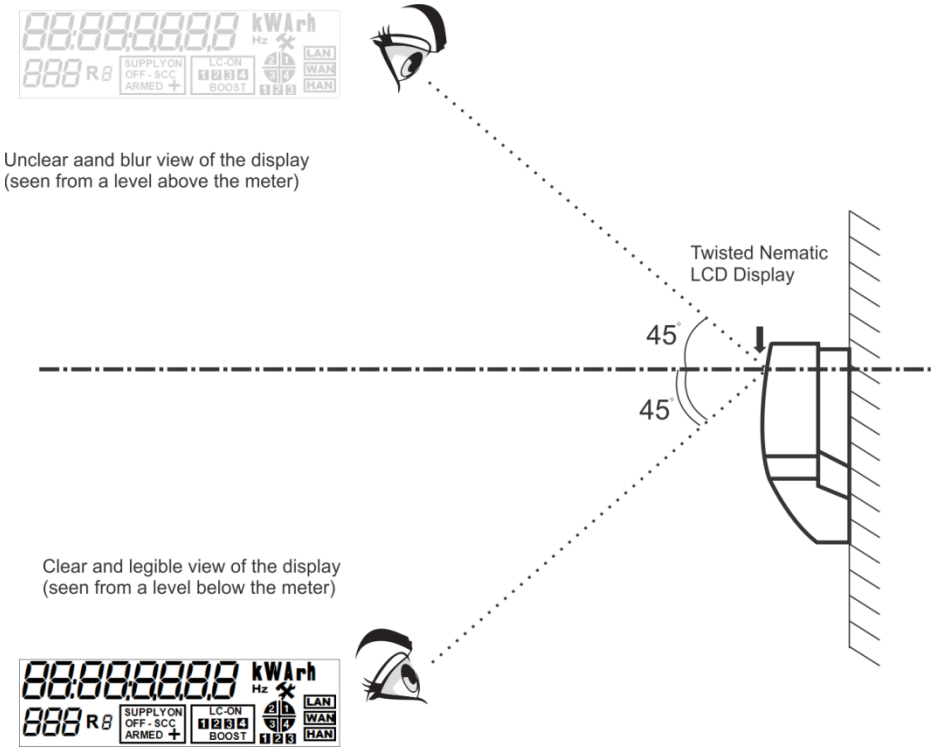

Figure 5: LCD Viewing Angle

3 Engineering Menu

The Engineering Menu allows performing different operations on Premier 210 such as performing an LED or Contactor Test, altering the active configuration in the meter such as resetting the MD, configuring phase(s) or testing the accuracy of the meter in test mode and NIC card antenna switching.

Please note the following in connection with the Engineering menu:

- To evoke the Engineering mode, press the left-hand push button for five seconds. The same key will allow you to navigate through all the menu options supported in Engineering Mode.

Note:

To help prevent unauthorised use of the meter using the push buttons, the meter comes with a default terminal cover interlock seal. To access the Engineering menu for the first time, break open the seal and open the main terminal cover. Then replace it back again. An event for terminal cover open will be logged by the meter.

- Push the **Scroll** (right) push button to access the required engineering menu option.
- Push the **Config** button to navigate/advance through the sub options of an engineering menu option.

In this section you will learn to:

- Configure an Energy Channel for Metro LED in the Engineering Mode under 3.1
- Configure the meter for 2 phase metering in the Engineering Mode under 3.2
- Reset the MD in the Engineering Mode under 3.3
- Perform a Contactor Test in the Engineering Mode under 3.4
- Manually disconnect/re-connect meter supply under **Error! Reference source not found.**
- Check the meter accuracy in Test Mode under 3.5

> A complete list of sample display screens are shown under Appendix **Error! Reference source not found.**.

3.1 Energy Channel Configuration for Metro LED

Two LEDs are provided on the meter with default settings - one for Active and the other for Reactive energy. Once configured, they flash in direct proportion to the rate of selected energy consumption; as determined by the meter pulse.

Other than the default, these LEDS can be temporarily configured to flash on any one of the 6 supported energy channels through the Engineering mode.

Note:

After a Power cycle, the LED flashing resorts to default mode.

The procedure to configure an energy channel for Metro LED through Engineering mode is as follows:

Step 1: Press the **Config** button for five seconds to evoke the Engineering Mode. The same button will enable navigation through all the options supported in Engineering Mode.	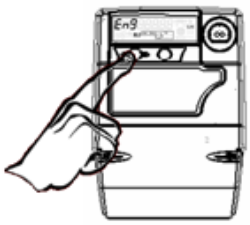	

Step 2: Navigate to the LED test option.	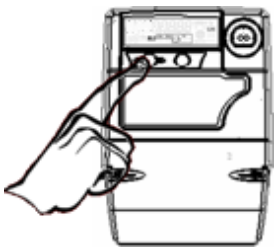	
Step 3: LED Test option - press the **Scroll** button. This action will invoke a list of the energy parameters configured in the meter using Flextend. An example parameter is shown here.		
Step 4: To navigate through the list press the **Config** button. Navigate to required parameter for taking the LED test. This example depicts the test for the Active Energy Export parameter.	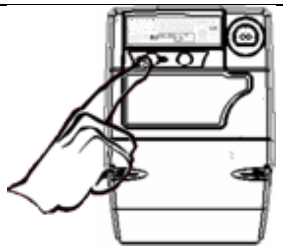	
Step 5: Press the **Scroll** button to start the test. The **Accept** display will appear.		
Step 6: Press the **Scroll** button to accept the configuration. The configured LED will start flashing for that parameter depending on the meter load condition.		

Note:

On completion of the configuration, revert to the normal mode by pressing the **Scroll** button.

3.2 Phase Configuration

Premier 210 can be configured to function on supply phase A, B and C or a combination of these. The procedure for configuration is shown below:

Step 1: Press the **Config** button for five seconds to evoke the Engineering Mode. The same button will enable navigation through all the options supported in Engineering Mode.	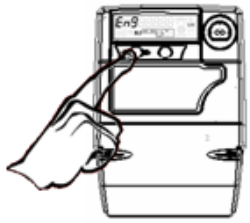	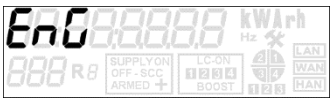
Step 2: Navigate to the Phase Configuration option.	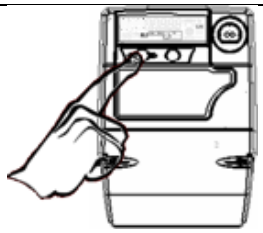	
Step 3: Phase Configuration option - press the **Scroll** button. This action will invoke a list of supply phase combinations that can be metered by the device. An example combination is shown here.		
Step 4: To navigate through the list press the **Config** button. This example depicts meter configuration for two phase combination on B-C phases.	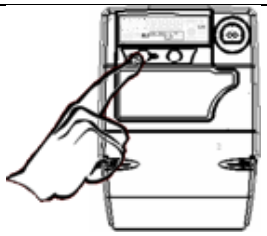	
Step 5: Press the **Scroll** button to accept the configuration. The Accept display appears.	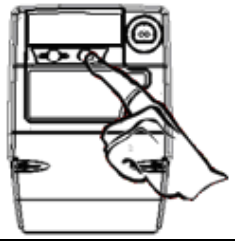	

Note:

On completion of the configuration, revert to the normal mode by pressing the **Scroll** button.

3.3 MD Reset

At the time of a billing action, the current values of Energy, Rate and Demand registers are moved to a history register and the value of the MD register is reset. The procedure to reset the MD is described below:

Step 1: Press the **Config** button for five seconds to evoke the Engineering Mode. The same button will enable navigation through all the options supported in Engineering Mode.	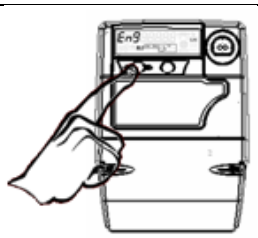	
Step 2: Navigate to the MD Reset option.	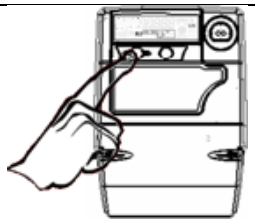	
Step 3: MD Reset option - press the **Scroll** button. This action will invoke the bill display.	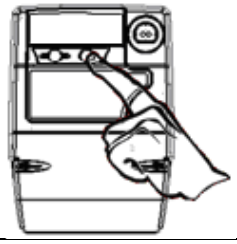	
Step 4: Press the **Scroll** button again to reset the MD. A confirmation screen is displayed.		

3.4 Contactor Test (for LC Switch)

This test validates if the contactor state (on/off) changes in response to the issued command. The procedure to perform the Contactor test is as follows:

Step 1: Press the **Config** button for five seconds to evoke the Engineering Mode.	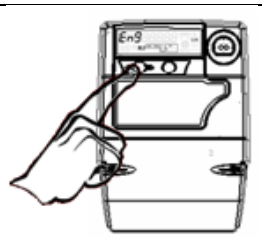	
Step 2: Press the **Config** button again and navigate to the Contactor Test option.	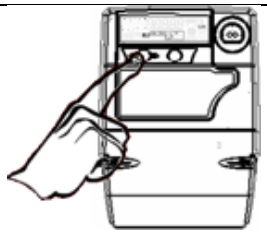	
Step 3: Contactor Test option - press the **Scroll** button to enter the option menu.		
Step 4: Press the **Scroll** button to complete the test. The desired switch is now connected.	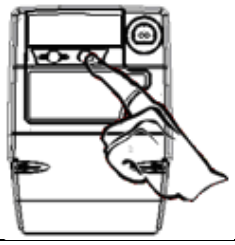	

Notes:

The Contactor test is available for the following switch types:

- Switch 2 or Relay 1 (Build Specific)

On completion of the test, revert to the normal mode by pressing the **Scroll** button.

3.5 Test Mode

This option allows checking the accuracy of the metering device against a known load condition. The test can be performed verifying the direction, current, voltage or energy values logged by the meter against a standard input.

Energy increment in the Main energy register is not stopped during test mode and the incremental energy value for Active Import Total and Active Export Total is displayed in high-resolution.

The procedure to perform the test is shown below:

Step 1: Press the **Config** button for five seconds to evoke the Engineering Mode. The same button will enable navigation through all the options supported in Engineering Mode.	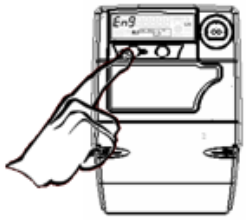	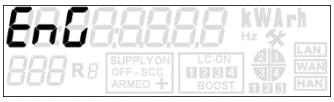
Step 2: Navigate to the Test Mode option.	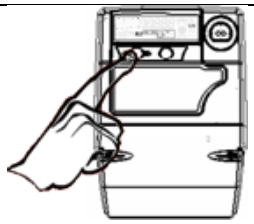	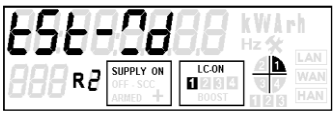
Step 3: Test Mode option - press the **Scroll** button. The Start Test display will appear.		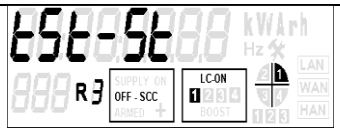
Step 4: Press the **Scroll** button again. The Accept display appears. This indicates that the test has started.		
Step 5: To end the test follow steps 1 to 3. Next click the **Config** button. The End Test display will appear.	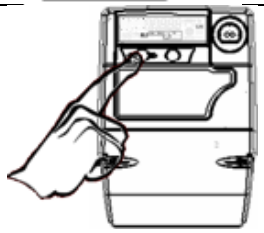	
Step 6: To end the test press the **Scroll** button. The **Accept** display appears. This indicates that the test has ended.	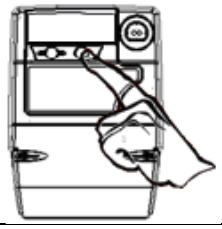	

Note:

During or on completion of the test navigate to the main energy display for Active Import Total or Active Export Total to view the changing values as a result of incrementing energy registers. An example display is shown for Active Import Total.

3.6 Tariff Activation

This option allows selection of a tariff from the meter's memory and further activating it.

Step 1: Press the **Config** button for five seconds to evoke the Engineering Mode. The same button will enable navigation through all the options supported in Engineering Mode.	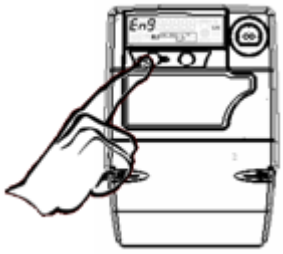	
Step 2: Navigate to the Tariff Configuration option.	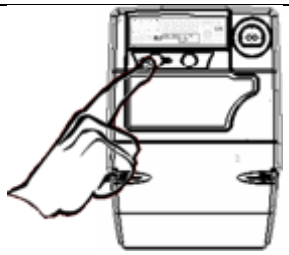	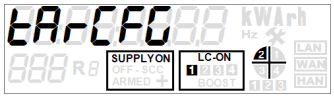
Step 3: Tariff Configuration option - press the **Scroll** button. This action will invoke a list of stored tariffs available in the meter. An example tariff is shown here.	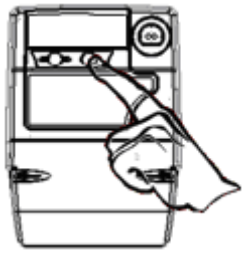	
Step 4: To navigate through the list press the **Config** button and select the desired tariff.	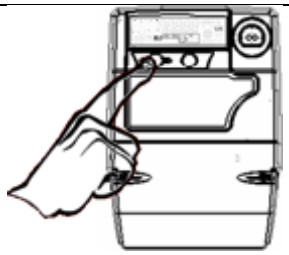	

Step 5: Press the **Scroll** button to accept the tariff configuration. The **Accept** display appears confirming acceptance.		

3.7 Antenna switching

This option allows switching the NIC antenna from to external and vice-versa.

Step 1: Press the **Config** button for five seconds to evoke the Engineering Mode. The same button will enable navigation through all the options supported in Engineering Mode. Navigate to the NIC CF option.	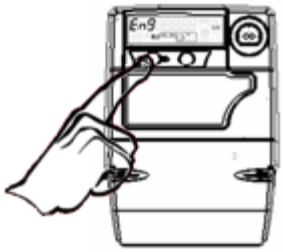	
Step 2: Press the **Scroll** button to select the NIC- CF option.		
Step 3: Press the **Config** button to navigate between these two screens.	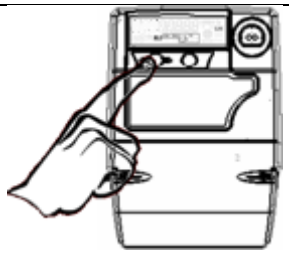	

Step 4: Press the **Scroll** button to select the desired antenna type. The **Accept** display appears confirming acceptance.		

4 Installation and mounting details

The installation of Premier 210 must be performed with extra care and attention. The existence of dangerous electrical voltage may be fatal. Hence, these operations should be performed only by skilled personnel.

In this section you will learn about:

- Lifting and unpacking the meter under **Error! Reference source not found.**
- Recommended Precautions and Safety Practices under **Error! Reference source not found. Error! Reference source not found.**
- Quick Start Installation Guidelines under 4.3
- Pre-installation Checklist under 4.4
- Installation Procedure under 4.5

4.1 Lifting the meter

Meter should be handled with care while lifting and transferring from one place to another. The symbols on the packing box should be strictly referred to while lifting and moving the same.

The meter needs to be unpacked from its original packing before installation. Meter should be taken out vertically after opening the box.

The meter needs to be unpacked from its original packing before installation. Follow the below mentioned steps for the same:

Open the box cover and take out the meter vertically.

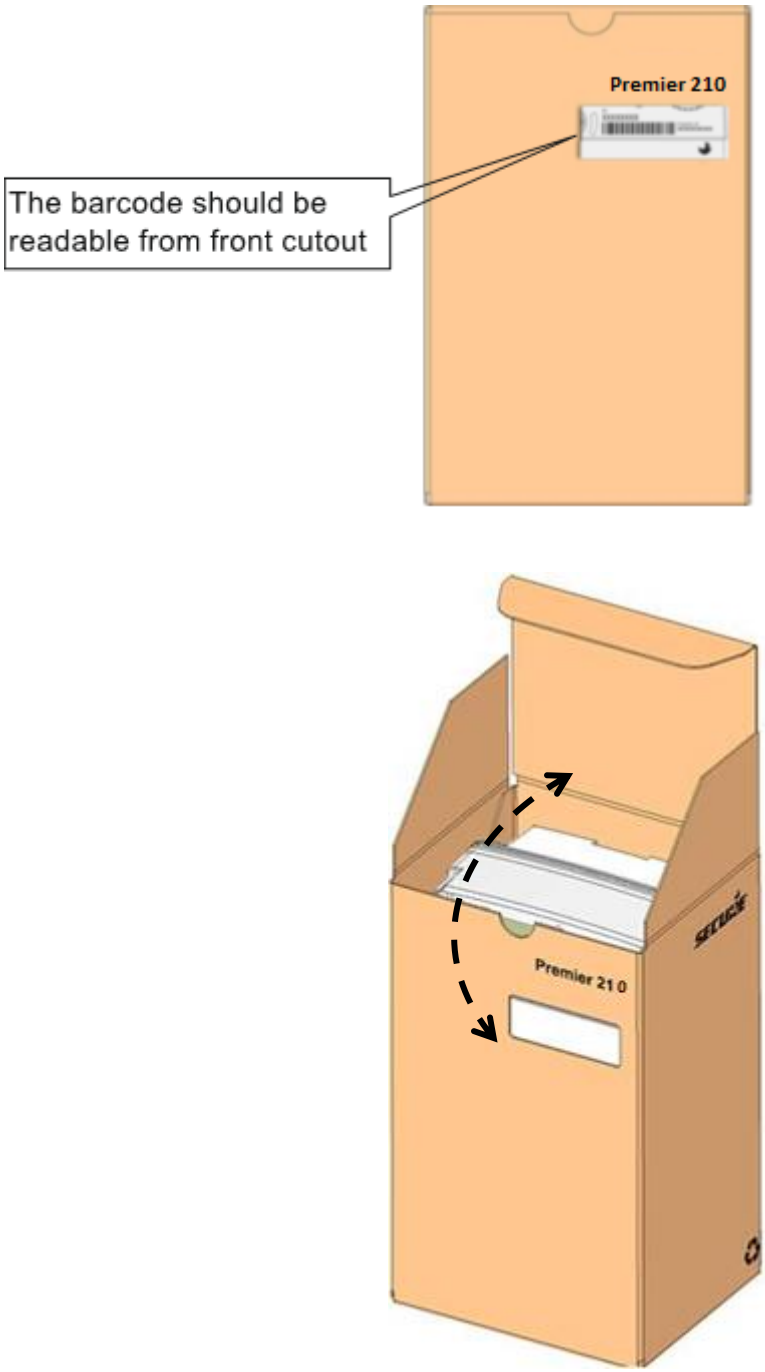

Figure 6: Unpacking the meter

4.2 Precautions & safety practices

- While working with live equipment, always wear hand-gloves made of an insulating material.
- Disconnect the mains supply before meter installation.
- Ensure that there are no loose or exposed electrical connection(s) or uninsulated, live wires near, or at, the installation site.
- Follow standard precautions to prevent damage due to electrostatic discharge while handling external antenna port.

> If necessary, use fast-drying, commercially available insulation coating to cover the exposed electrical wiring.

- Always use proper tools and equipment.
- Never use damaged tools.

> The use of damaged tools is major cause of installation-related accidents. Improper tools may cause an irreversible damage to the meter and its accessories.

- When the meter is being installed within the premises like an apartment (inside), always install it at a safe height which allows clear vision of meter display and easy access to meter buttons.
- Never connect a load which makes the meter operate outside its specified limits.

> Operating current range of meter is specified on the rating plate.

4.3 Quick start

This section is intended only for experienced field staff with prior exposure to energy meter installation. It summarizes the recommended sequence of actions for installation.

4.3.1 Getting started

1. Select an easily accessible mounting location for the meter. When the selected location has multiple meter installations, identify the correct consumer installation.
2. Ensure safe working conditions near the installation location.
3. Check whether the consumer installation can be isolated safely from the mains.
4. Check for the polarity of the supply.
5. Label the wiring for correct connections.

4.3.2 Installing the Meter (only by experienced staff)

1. Remove the main terminal cover and the secondary terminal cover.
2. Mount the meter on the wall using the recommended screws.
3. Loosen the terminal screws at the meter terminals.
4. Connect the load (3-phase and neutral) to the meter.

5. Connect the supply (3-phase and neutral) to the meter. Ensure that the correct polarity is used.
6. As required, make connections for Pulse Outputs, Load Control and Relays.
7. Tighten the terminal screws again.

> Tighten the lower terminal screw first followed by the upper screw. Check the lower screw again for proper tightening.

8. Once all the connections are done, close the secondary terminal cover.
9. Replace the main terminal cover back to its original position and tighten the sealing screw.
10. Switch on the mains.
11. Check the meter display. All the segments of the LCD should be on.

> This is generally known as ‘All Segment Check’ display.

12. Seal the meter terminal block.

4.4 Pre-installation checklist

This section provides you with a recommended list of items and tools that will aid you with the installation procedure. Please note that some additional tools may be required depending upon site installation conditions.

4.4.1 Tools and accessories

Carry appropriate tools for meter installation keeping in mind the site conditions.

4.4.2 Selecting an appropriate mounting location

The meter is suitable for wall mounting and can be directly installed on wall with the recommended screws and mounting bolts. It can also be installed on a metering panel inside an enclosure.

Notes:

- The strength and rigidity of the mounting surface should be capable of sustaining the meter’s weight.
- To ensure optimal performance of the radio system with the meter, the radio antenna must be fitted externally if the meter (or modem) is installed inside a metal enclosure.

4.4.3 Selecting suitable mounting screws

Given below is a list of recommended Mounting Screws to ensure proper fixing of meter at the mounting location.

Table 5: **Recommended mounting screws**

S. No	Position for use	Screw type	No. of screws	Screw material	Recommended torque (in Nm)
1.	Top Mounting Hole	AB8	1	-	-
2.	Bottom Mounting Holes (Oblong)	M4	2	Steel	1.2

4.4.4 Selecting the cable

Given below is a general cable chart with details on current carrying capacity using different conductors.

Table 6: Cable selection chart

S. No	Cross section area (mm^2)	Current range: Copper conductor (in Amperes)	Current range: Aluminium conductor (in Amperes)
1.	1	8	-
2.	1.5	12	-
3.	2.5	20	-
4.	4	26	23
5.	6	33	30

This is a general chart and the installer may refer to vendor specification for the accurate details.

Copper cable is highly recommended for current ratings above 50 ampere.

4.5 Installation procedure

Having selected a suitable mounting position for the meter, install the meter using the following procedure.

Note: Supply to the metering equipment must be isolated by removing active isolation link at the supply side to allow safe access before installation or removal.

4.5.1 The groundwork

13. Ensure that all the necessary tools are available.

    Refer to the section 4.4.1 for more details.

14. By visual inspection, check for any loose or exposed electrical connections near the installation location.

    If required, secure the loose connections or use fast-drying, commercially available insulation coating to cover exposed connections.

15. Check and label the polarity of the supply to the consumer circuit.

> Polarity test can be performed by a line tester. Phase wire should cause the tester's LED to glow whereas the neutral wire should not.

16. Ensure that the consumer's installation is safe for isolation.

> Check the health status of fuses, cut-outs etc.

17. Isolate / disconnect the consumer's supply before installation of the meter.
18. Check for the correct cable size.
19. When multiple meters are being installed next to each other on a central panel, ensure that correct position is located for each consumer's meter. Label the meter accordingly.
20. Where a meter box is provided, fix the meter box first and then proceed with the installation of the meter.
21. Remove both main and secondary terminal block cover of the meter. Refer **Error! Reference source not found.**.
22. The communication module is an RF device: choose a suitable location for optimum reception.
23. If you are fitting an external antenna: allow adequate space for both the antenna and cable.

4.5.2 Mounting the meter

1. Ensure that the recommended screw is tightened at the correct mounting position.

> The mounting screw should be able to withstand the meter weight (approximately 2 kg).

2. Hang the meter from the top mounting hole provided at the rear panel of the meter.
3. Mark out the positions for mounting screws.

> Refer mounting dimensions given above or mounting template available at the rear of meter packing box.

4. Remove the meter from the top mounting screw and drill out the holes for the bottom mounting screws.
5. Re-hang the meter from the top mounting screw, and then fit the bottom mounting screws.

> Two pairs of mounting holes are provided adjacent to the terminal block from which any pair can be used for fixing the meter. These are visible on the front after removing the terminal block cover.
>
> Refer to the section Selecting Suitable Mounting Screws for more details.

Note: The strength and rigidity of mounting surface must be capable of sustaining the meter and hub's weight.

4.5.3 Preparing cables for termination

1. Ensure that a cable of the correct rating is being used. If a cable of lower rating is used, replace it with appropriate cable.
2. Strip the insulation of cables used as per given recommendations. Following table shows the internal bore diameters of all the terminals.

Table 7: Premier 210 Internal Bore Diameters

S. No	Meter terminal type	Internal bore diameter (in mm)	Depth of terminal hole (in mm)
1.	Main Supply	5.0	18
2.	Load Control Relay Terminals	3.5	6.5
3.	Pulse I/O	3.5	6.5

3. Check the condition of the cable. If the cable is corroded or oxidized, replace the entire cable.
4. If cable was already stripped for a previous installation, cut the previous stripped length. Re-prepare the cable termination.
5. Loosen the terminal screws and insert one cable core into the terminal cage.
6. Ensure that at least 5 mm of the insulated part of the cable core is inserted into the terminal box shroud. If the cable insulation is thick enough to be inserted into the shroud, strip an extra length of 5.00 mm and insulate this extra length with a standard insulation tape to prevent exposed conductor at terminal end. Terminal block shroud will work as an insulation sleeve.
7. Prepare each core in the same manner for supply as well as load side.

4.5.4 Making connections

1. Insert each conductor core into the appropriate connection cage. Insert each cable into the terminal box shroud.

2. Connect instrument transformer (CT)'s secondary terminal at 1,3,4,6,7,9 terminals and Supply side at 2,5,8,10, as mentioned on the connection diagram of the meter's extended terminal

> Ensure that no exposed conductor is visible outside the terminal block shroud and approximately 5.00 mm insulated length is inside the shroud.

3. For pulse outputs connections, insert cable in lower holes first, tighten them and then connect terminals corresponding to upper holes.

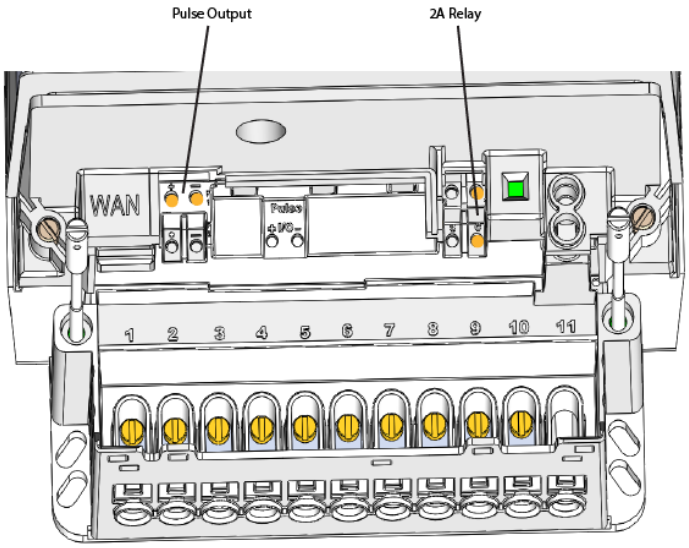

Figure 7: Terminal Block showing all the Load Terminals

4. Insert the cables into the appropriate slots of Pulse Output 2 and 2A Relay, as shown in Figure 8.

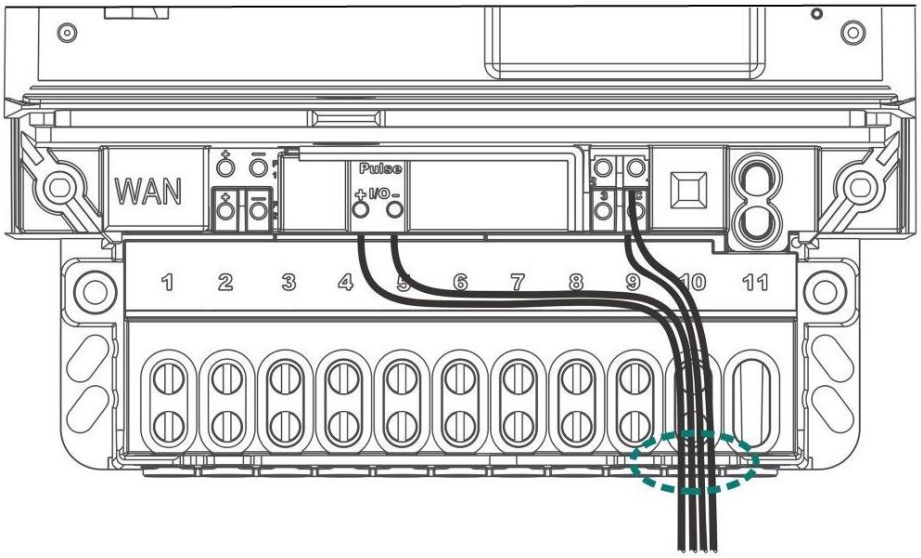

Figure 8: Pulse output2 and 2A Relay connections for wire routing

Note: The connected wires should come out from the space between the last two projected ribs (as shown in the above figure).

5. Replace and fit the secondary terminal cover. Now, insert the cables into the slots of Pulse Output 1, as shown in Figure 9.

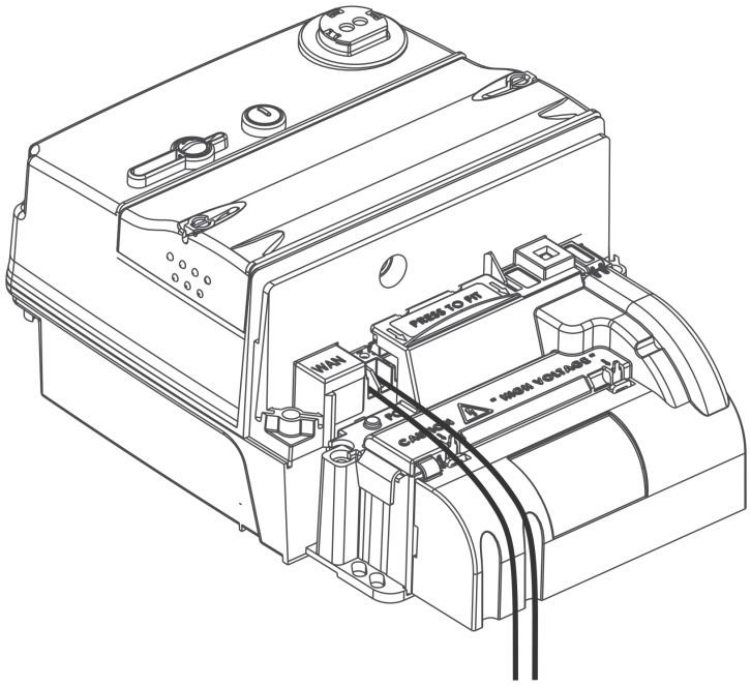

Figure 9: Pulse output 1 connection for wire routing

6. Ensure that no exposed conductor is visible outside the terminal block shroud.

Attention

Be extremely careful to ensure that no conductor part of the cable is in direct contact with any other conductive surface.

Local best practices and regulatory stipulations must be observed while installing the meter.

Refer the below table for recommended torque. Use a torque screw driver to tighten the screws. Tighten all the terminal screws in turn using a torque screw driver. Tight the lower screws first, followed by the upper screws. Check tightness of lower screw after tightening the upper screw. Check for any loose connections and tighten if required.

Table 8: Details for various electrical connection screws

S. No	Meter terminal type	Screw type	No. of screws	Screw material	Recommended torque (in Nm)
1.	Main Supply	M4	20	Brass	1.2
2.	Pulse O/P	M3 * 6.5 mm	4	Grub, Brass	0.5

3.	Relay	M3 * 6.5 mm	2	Grub, Brass	0.5
4.	ETBC sealing	M4	2	Brass	1.2

Tightening the screws causes the cage clamp to grip the conductor more tightly. Tightening both screws ensures that the force is distributed correctly.

7. If the installation requires an external antenna refer the **Error! Reference source not found.** and then return to these instructions.
8. Fit the main terminal cover with the screw over the terminal block. Do not seal the screw at this stage.
9. Reconnect the mains supply. The LCD should show 'All segment check' display.
10. If the load is switched on, the calibration LEDs should start flashing in accordance with the current drawn. If there is no load, the calibration LEDs should not flash.
11. Seal the meter with the available sealing kit. Utility seals can be applied at terminal cover and Configuration button. The sealing provision in Premier 210 is as follows:
    - 2 seals at the back of the meter (upper screws)
    - 2 seals under the terminal cover
    - 2 seals on the terminal cover
    - 1 optional seal for Configuration button
    - 2 seals on module

This completes the installation of Premier 210.

Appendix 1. LCD Display

Given below is a list of displays supported by Premier 210. Some of the displays are variant specific and may not be available in all variants.

1	CHANNEL REGISTERS		2	CHANNEL REGISTERS-HISTORY	
STANDARD ENERGY REGISTERS	123456 kWh 001 R2	active import energy	HISTORY (MOST RECENT) ENERGY REGISTERS	98765 kWh 028 R2	active import energy-History 1
	123456 kWh 002 R2	active export energy		98765 kWh 029 R2	active export energy-History 1
	123456 kVArh 003 R2	reactive import energy (Q1+Q2)		98765 kVArh 030 R2	reactive import energy (Q1+Q2) - History 1
	123456 kVArh 004 R2	reactive export energy (Q3+Q4)		98765 kVArh 031 R2	reactive export energy (Q3+Q4) - History 1
	123456 kVAh 007 R2	Apparent (All Quadrants)		98765 kVAh 034 R2	Apparent (All Quadrants)History 1
	123456 kVAh 008 R2	Apparent (while Active Import		98765 kVAh 035 R2	Apparent (while Active Import History 1
	123456 kWh 012 R2	Active energy (kWh) Import – Phase1		98765 kWh 039 R2	Active energy (kWh) Import – Phase1History 1
	123456 kWh 013 R2	Active energy (kWh) Import – Phase2		98765 kWh 040 R2	Active energy (kWh) Import – Phase2History 1
	123456 kWh 014 R2	Active energy (kWh) Import – Phase3		98765 kWh 041 R2	Active energy (kWh) Import – Phase3History 1
	123456 kWh 015 R2	Active energy (kWh) Export – phase1		98765 kWh 042 R2	Active energy (kWh) Export – phase1History 1
	123456 kWh 016 R2	Active energy (kWh) Export – phase2		98765 kWh 043 R2	Active energy (kWh) Export – phase2History 1
	123456 kWh 017 R2	Active energy (kWh) Export – phase3		98765 kWh 044 R2	Active energy (kWh) Export – phase3History 1
	123456 kWh 018 R2	Active energy(kWh) imp+Exp.(For		98765 kWh 045 R2	Active energy(kWh)imp+ Exp.(Forwarde

		warded) - 3Phase			d) - 3PhaseHistory 1
	356478 kVArh 046 R2	Reactive energy Import while Active Import (Q1)		256478 kVArh 061 R2	Reactive Energy Import while Active Import (Q1) -History 1
	356478 kVArh 047 R2	Reactive Energy Export while Active Import (Q4)		256478 kVArh 062 R2	Reactive Energy Export while Active Import (Q4) - History 1
	356478 kVArh 048 R2	Reactive Energy Import while Active Export (Q2)		256478 kVArh 063 R2	Reactive Energy Import while Active Export (Q2) - History 1
	356478 kVArh 049 R2	Reactive Energy Export while Active Export (Q3)		256478 kVArh 064 R2	Reactive Energy Export while Active Export (Q3) - History 1
3	TARIFF RATE REGISTERS		4	TARIFF RATE REGISTERS-HISTORY	
STANDARD TARIFF RATE REGISTERS	356478 kWAh 040 R2	active import energy	HISTORY (MOST RECENT) TARIFF RATE REGISTERS	256478 kWAh 055 R2	active import energy-History 1
	356478 kWAh 041 R2	active export energy		256478 kWAh 056 R2	active export energy-History 1
	356478 kVArh 042 R2	reactive import energy (Q1+Q2)		256478 kWAh 057 R2	reactive import energy (Q1+Q2) - History 1
	356478 kVArh 043 R2	reactive import energy (Q3+Q4)		256478 kWAh 058 R2	reactive import energy (Q3+Q4) - History 1
	356478 kVAh 050 R2	Apparent (All Quadrants)		256478 kVAh 065 R2	Apparent (All Quadrants) - History 1
	356478 kVAh 051 R2	Apparent (while Active Import)		256478 kVAh 066 R2	Apparent (while Active Import) - History 1
	356478 kVAh 054 R2	Current/active rate register			
5	DIAL TEST REGISTERS (HIGH RESOLUTION ENERGY REGISTERS)				
	12245879 WAh 031 R2	active import energy		12245879 VArh 039 R2	Reactive Energy Import while Active Export (Q2)
	12245879 WAh 032 R2	active export energy		12245879 VArh 040 R2	Reactive Energy Export while Active Export (Q3)
	12245879 VArh 033 R2	reactive import energy (Q1+Q2)		12245879 VAh 041 R2	Apparent (All Quadrants)

	12245879 VArh 034 R2	reactive import energy (Q3+Q4)		12245879 VAh 042 R2	Apparent (while Active Import)
	12245879 VArh 037 R2	Reactive Energy Import while Active Import (Q1)		12245879 VArh 038 R2	Reactive Energy Export while Active Import (Q4)
6	MAXIMUM DEMAND (MD)				
ACTIVE ENERGY FOR MDREGISTER	13.786 kW 070 R2	UMD register for channel 1	REACTIVE ENERGY FOR MDREGISTER	19.786 kVAr 072 R2	UMD register for channel 1
	19.786 kW 071 R2	UMD register for channel 2		19.786 kVAr 073 R2	UMD register for channel 2
APPARENT ENERGYFOR MD REGISTER	22.790 kVA 074 R2	UMD register for channel 1			
7	RISING DEMAND				
RISING DEMAND	28: 02.786 kW 070 R2	rising demand (active import energy)	RISING	28: 02.750 kW 071 R2	rising demand (active export energy)
	28: 02.750 kVAr 072 R2	rising demand (reactive energy)		28: 03.750 kVA 073 R2	rising demand (Apparent energy)
8	MAXIMUM DEMAND TIME AND DATE				
	02:30:00 t kVA 080 R2	MD time (kVA resembles energy channel i.e whether active, reactive or apparent)		10: 12: 11 d kVA 081 R2	MD date
9	MAXIMUM DEMAND RESET DATE, RESET TIME AND RESET COUNT				
MD RESET DATE	10: 11: 11 d 083 R2	date of billing event	MD RESET	10:30:00 t 085 R2	time of billing event
	-------- 083 R2	billing event has not occurred		-------- 084 R2	billing event has not occurred
	bi LL: 4 085 R2	MD reset count			
10	TIME AND DATE DISPLAY				
	10: 15:54 t 086 R2	standard time (24 hours clock)		10: 11: 11 d 087 R2	standard date
	-------- 094 R2	bad time (clock failure)		-------- 094 R2	bad date (clock failure)
11	CURRENT DISPLAYS				
	1A 76.45 A 015 R2	active current (phase 1)		100.00 A 011 R2	over current threshold

	2A-076.45 012 R2	active current (phase 2)		3A 53.52 016 R2	active current (phase 3)
	1r 2.67 013 R2	reactive current (phase 1)		2r 12.67 017 R2	reactive current (phase 2)
	3r 2.67 017 R2	reactive current (phase 3)		1L 97.67 019 R2	line current (phase 1)
	2L 57.70 016 R2	Line current (phase 2)		3L 57.80 019 R2	line current (phase 3)
	3P 100.0 019 R2	maximum current (3 phase)		P1 100.0 030 R2	maximum current (phase 1)
	P2 100.0 027 R2	maximum current (phase 2)		P3 100.0 031 R2	maximum current (phase 3)
	3P 5.0 021 R2	minimum current (3 phase)		P1 1.0 022 R2	minimum current (phase 1)
	P2 2.0 029 R2	minimum current (phase 2)		P2 7.0 033 R2	minimum current (phase 3)
12	POWER FACTOR DISPLAYS				
	3P 1.000 033 R2	maximum power factor (3 phase)		P1 1.000 043 R2	maximum power factor (phase 1)
	P2 1.000 039 R2	maximum power factor (phase 2)		P3 1.000 044 R2	maximum power factor (phase 3)
	3P 0.525 040 R2	minimum power factor (3 phase)		P1 0.035 045 R2	minimum power factor (phase 1)
	P2 0.520 042 R2	minimum power factor (phase 2)		P3 0.035 047 R2	minimum power factor (phase 3)
13	POWER DISPLAYS				
	72.000 kW 055 R2	active power (instantaneous)		12.528 kVAr 056 R2	reactive power (instantaneous)
	76.545 kVA 057 R2	apparent power (instantaneous)		P1 10.300 kW 058 R2	Phase1 active power (instantaneous)
	P2 10.300 kW 059 R2	Phase2 active power (instantaneous)		P3 10.300 kW 060 R2	Phase 3 Active Power(instantaneous)
	P1 10.300 kVAr 061 R2	Phase1 reactive power (instantaneous)		P2 10.300 kVAr 062 R2	Phase2 reactive power (instantaneous)

	P3 10.300 kVAr 063 R2	Phase3 reactive power (instantaneous)			
14	GENERAL DISPLAYS				
	PAGE 01 888 R8	page		LEd 6000 kWh 888 R8	Metrological LED
	240.0 V 012 R8	primary voltage		100.00 A 013 R8	primary current
	100.00 A 014 R8	current limit value		180.0 V 015 R8	voltage limit value
	FPG 1.601 015 R8	Clem name		GroUP000 015 R8	tariff name
	10.38 015 R4	remaining time adjustment		-01.56 016 R4	remaining time adjustment (reverse time)
	888 R8	blank		USn00008 018 R4	serial number (Low)
	EnGY 017 R4	serial number (High)		888 R8	Display ID
15	METER STATUS				
	St:Good 020 R4	good		St: 001 020 R2	NVM fail
	St: 002 020 R2	bad clock		St: 040 020 R2	Inter processor communication failure
	St: 010 020 R2	low battery		St: 056 020 R2	all status flags are set
	St: 008 020 R2	switch weld		St: 040 020 R2	Inter processor communication failure
	St: 056 020 R2	All status flags are set		St: 020 020 R2	ETBC Open
16	BATTERY STATUS				
	bAt :Good 023 R4	good		bAt :bAd 023 R4	bad
	bAt :Lo 023 R4	low		bAt : 1000 024 R4	on hours
17	POWER FACTOR AND FREQUENCY				
	PF 1.000 Hz 031 R4	power factor		50.000 Hz 031 R4	frequency
18	VOLTAGE DISPLAYS				

	P1 240.0 V 032 R4	phase 1		P2 226.8 V 033 R4	phase 2
	P3 229.7 V 033 R4	phase 3		3P 240.0 V 034 R4	maximum voltage
	P1 240.0 V 035 R4	maximum voltage (phase 1)		P2 275.0 V 035 R4	maximum voltage (phase 2)
	P3 275.0 V 035 R4	maximum voltage (phase 3)		3P 195.0 V 036 R4	minimum voltage
	P1 184.6 V 037 R4	minimum voltage (phase 1)		P2 187.6 V 037 R4	minimum voltage (phase 2)
	P3 188.5 V 037 R4	minimum voltage (phase 3)		23:12:16 t V 038 R2	maximum voltage time
	23:12:16 t V 039 R2	maximum voltage time (phase 1)		23:12:16 t V 041 R2	maximum voltage time (phase 2)
	04:07:12 d V 042 R2	maximum voltage date (phase 3)		04:07:12 d V 043 R2	maximum voltage date
	04:07:12 d V 044 R2	maximum voltage date (phase 1)		04:07:12 d V 045 R2	maximum voltage date (phase 2)
	04:07:12 d kWArh 046 R4	maximum voltage date (phase 3)		23:12:35 t V 047 R2	minimum voltage time
	23:12:35 t V 048 R2	minimum voltage time (phase 1)		23:12:35 t V 049 R2	minimum voltage time (phase 2)
	23:12:35 t V 050 R2	minimum voltage time (phase 3)		05:07:12 d V 050 R2	minimum voltage date
	05:07:12 d V 051 R2	minimum voltage date (phase 1)		05:07:12 d V 052 R2	minimum voltage date (phase 2)
	05:07:12 d V 053 R2	minimum voltage date (phase 3)			
NETWORK STATUS AND CONTROL					
19	LAN COMMUNICATION				
	LAn :000 053 R0	Not available		LAn :001 053 R0	Access disabled
	LAn :002 053 R0	Initialized		LAn :016 053 R0	Found
	LAn :032 053 R0	Connected			

Note – For codes 00 to 15 the LAN status annunciator does not glow, for codes 16 to 31 the LAN status annunciator will flash at approximately 2 Hz and for codes 32 to 47 this annunciator glows continuously.					
20	MISCELLANEOUS DISPLAYS				
	07:54:55 t 070 R4	Time of loss of voltage / voltage fail) of phase 1		05:05:12 d 071 R4	Date of loss of voltage of phase 1
	07:34:55 t 072 R4	Time of loss of voltage of phase 2		05:05:12 d 073 R4	Date of loss of voltage of phase 2
	07:34:00 t 074 R4	Time of loss of voltage of phase 3		05:05:12 d 075 R4	Date of loss of voltage of phase 3
	10 076 R4	Power off hour for less than 1 minute		125 077 R4	Power on-off count
	on 000125 078 R4	Cumulative Power ON Minute		oF 000188 079 R4	Cumulative Power OFF Minute
	oP1 on 080 R4	Instantaneous state of output 1		oP2 oF 081 R4	Instantaneous state of output 2
	Ch1 : 1000 086 R4	Energy pulsing configuration of output 1 (channel number and pulses/KWh)		Ch2 : 10 087 R4	Energy pulsing configuration of output 2 (channel number and pulses/KWh)
	L3: 150 100 R4	Current angle (deg), relative to voltage on same phase: phase 1		L2: 312.52 099 R4	Current angle (deg), relative to voltage on same phase: phase 2
	L3: 150 100 R4	Current angle (deg), relative to voltage on same phase: phase 3		n-AL 089 R4	Cover status (not allowed/un-authorized)
	AL 088 R4	Cover status (allowed/authorized)		tar 01 017 R2	Active configuration number
	100 052 R4	Max number activations allowed (by button push)		054 053 R4	Number of activations remaining (by button push)
	122 067 R4	Number of Aux - 2 Connect/disconnect switch cycles			
21	ENGINEERING MODE DISPLAY				

		Engineering mode			LED Test	
		Contactor Test			Phase Configuration	
		MD Reset			Test Mode	
		Tariff activation			Configuration named “SOLAR001” stored at location x	
		Ask Conformance for Bill			Request is rejected	
		Request is Accepted				
22	TOTAL HARMONIC DISTORTION					
		Phase 1 Voltage total Harmonic distortion in %			Phase 2 Current total Harmonic distortion in %	
		Phase 2 Voltage total Harmonic distortion in %			Phase 3 Current total Harmonic distortion in %	
		Phase 3 Voltage total Harmonic distortion in %			Phase 3 Current total Harmonic distortion in %	
23	PHASE SEQUENCE					
		Phase Sequence Ok			Invalid Phase Sequence (Wiring Errors)	
24	CONTACTOR TEST (LC & RELAYS)					
		Relay 1 On				

Note:

Some of the displays are build specific and may not be available in all builds.

Appendix 2. List of Display Flags and Corresponding Meter States

Changes in the meter state as a result of event occurrences /varying conditions are indicated by flags on the meter display. Some flags warrant attention. Therefore, when a flag is set, the service icon glows. This is an indication that due service by authorised personnel is needed for maintenance.

A list of possible meter flags and their descriptions is tabulated below:

Flag	Description
St : 01	Indicates NVM failure
St : 02	Indicates Real time clock error
St :10	Indicates Low battery
St : 03	Indicates NVM failure and error in time clock
St : 11	Indicates NVM failure and Indicates Low battery
St:12	Indicates error in time clock and Low battery
St: 13	Indicates NVM failure, error in time clock, and Low battery
St: 08	Switch Weld
St:20	ETBC Open
St:40	Inter processor communication failure

NOTE:

The **St: Good** flag on the display indicates that meter is in a healthy state.

Appendix 3. Phase Icon Indicators

The phase indicators show the presence of phase voltages in the meter with the characters **1**, **2**, and **3** representing **A**, **B**, and **C** phases respectively. For meters on two phase voltages, indicators glow only for the configured phase combination such as **2, 3** representing **B** and **C** or **1, 2** representing **A** and **B** and so on. The respective icons will glow only if the phase voltage of the configured phase is greater than 75% of nominal voltage.

In addition, the respective phase indicators will continuously flash, if the Line current of a configured phase is greater than 0.5% of I Basic Current and current direction is reverse on that phase.

Note:

The same icons indicate presence of phase voltages and reverse run conditions. But in case of reverse run conditions the phase icons flash continuously. This indication takes precedence over the Phase presence. The indicators also flash if the meter has been configured for Co-Generation.

Appendix 4. Fitting an External Antenna

Follow these instructions if the installation requires an external antenna.

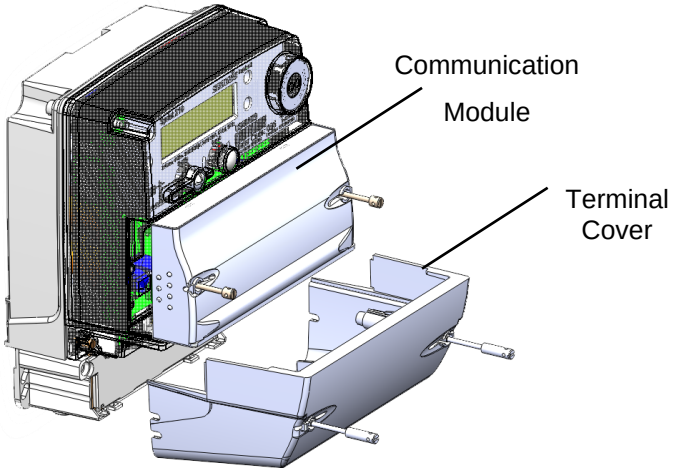

1 Loosen the sealing screws and carefully remove the communication module.

2 Loosen the sealing screws and remove the terminal cover.

3 Feed the cable through the cable hole between the module area and the terminal block cover area.

4 The external antenna connectors are located on the back of the module.

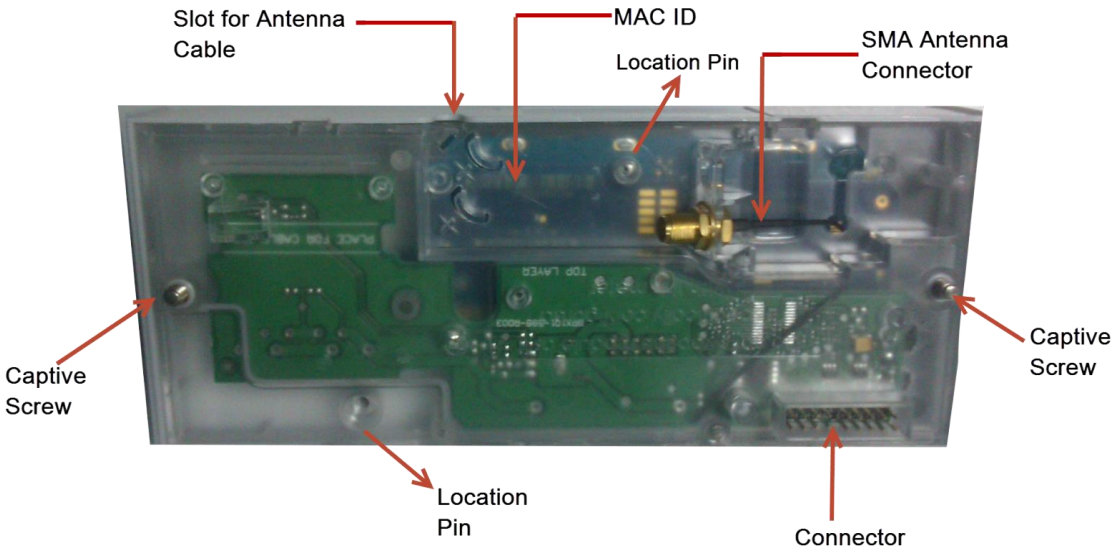

5 Be careful when screwing the SMA connector. Do not use excessive force.

6 Fit the cable into the cable clips on the module.

7 The cable passes through the antenna slot on the edge of the communication module.

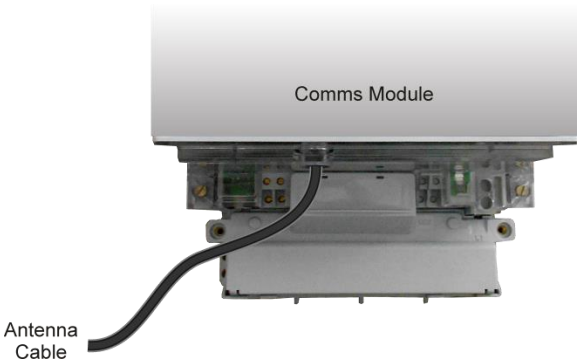

8 Fit the communication module back onto the meter.

9 The antenna cable passes out from the short Terminal Block Cover area.

10 Fit the Terminal Block Cover.

NOTE:

To ensure optimal performance of the radio system with the meter, the radio antenna must be fitted externally if the meter (or modem) is installed inside a metal enclosure.

Follow these instructions if the installation requires an external antenna.

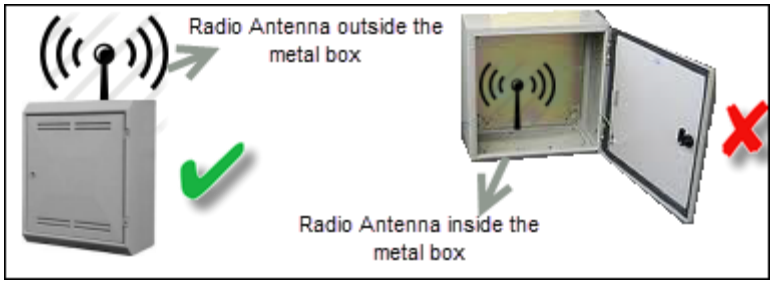

Any antenna selection should be approved by Secure prior to installation to ensure compatibility and avoid degradation of communication performance.

Antenna Placement Requirements

Antenna placement can critically impact the operation of the meter and the radio system and consequently the following recommendations and requirements need to be carefully reviewed and incorporated into the installation.

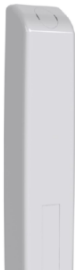

Figure 10: External antenna

1. For optimal performance the external antenna should be oriented vertically as per Figure 10: External antenna.
2. The installation of an external antenna within a meter enclosure can have a significant detrimental impact on communications performance and further cause interference with the operation of the meter. To avoid these issues, where the meter (or modem) is installed within a metal enclosure, the radio antenna **must** be fitted externally.
3. Irrespective of enclosure an external antenna must not be fitted within 5 cm of the meter.
4. Where practical, the antenna shall be fitted above the meter.

Appendix 5. Replacing the Communication Module

This section describes the procedure to replace an existing communication module in the field.

1 Loosen the sealing screws on the existing communication module and pull out to detach completely. Refer the figure below.

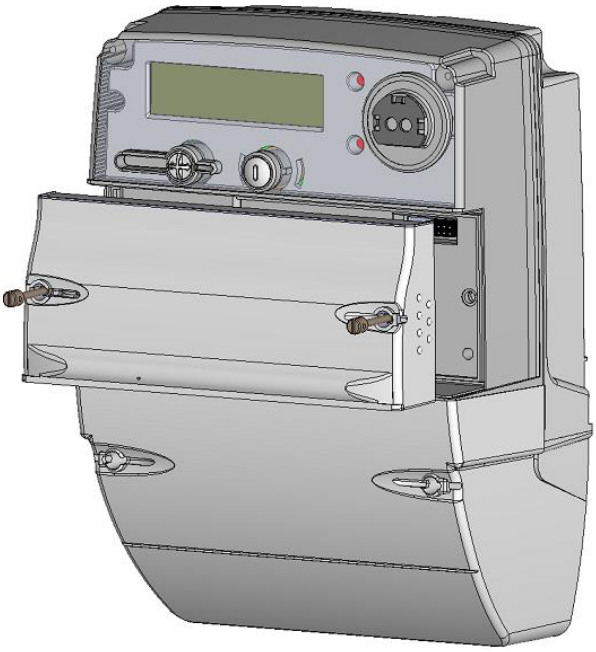

2 To fix the new communication module (plug on device), gently push it straight down into the module cavity, ensuring that the male connector (on the communication module) and female connector (on the meter) fit smoothly. Ensure that the connector pins are not bent or damaged during insertion. A reference illustration is shown below.

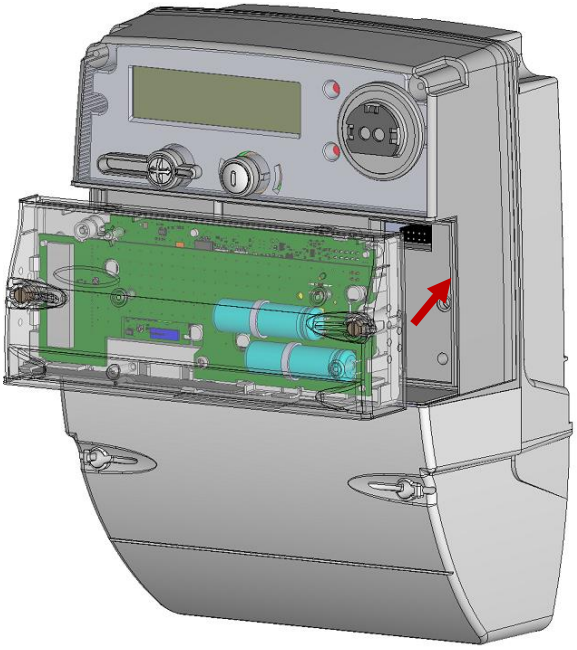

3 Secure the sealing screws by tightening appropriately.

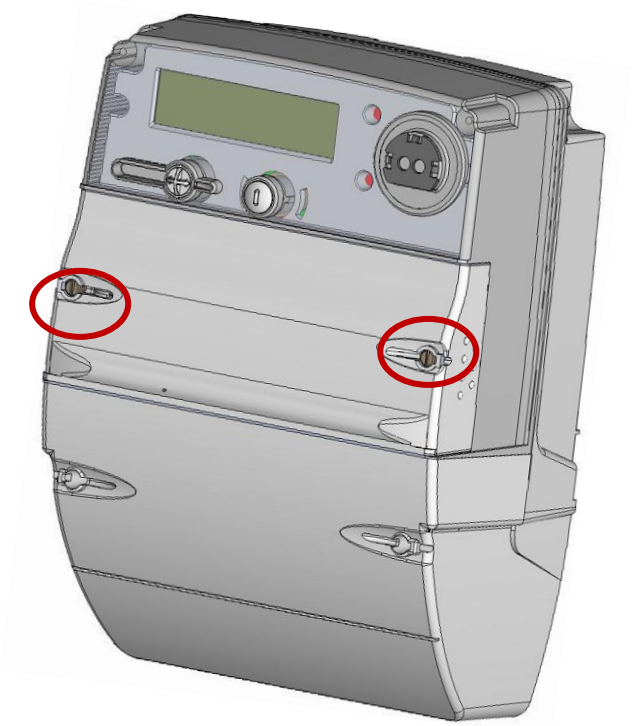

Appendix 6. Opening and Fitting the Secondary Terminal Cover

Follow these instructions to open the secondary terminal cover.

1 First pull downwards at the projection marked with arrows at the snap area, while holding the cover in place around the side walls. This will loosen the cover from the top. Refer to the figure below.

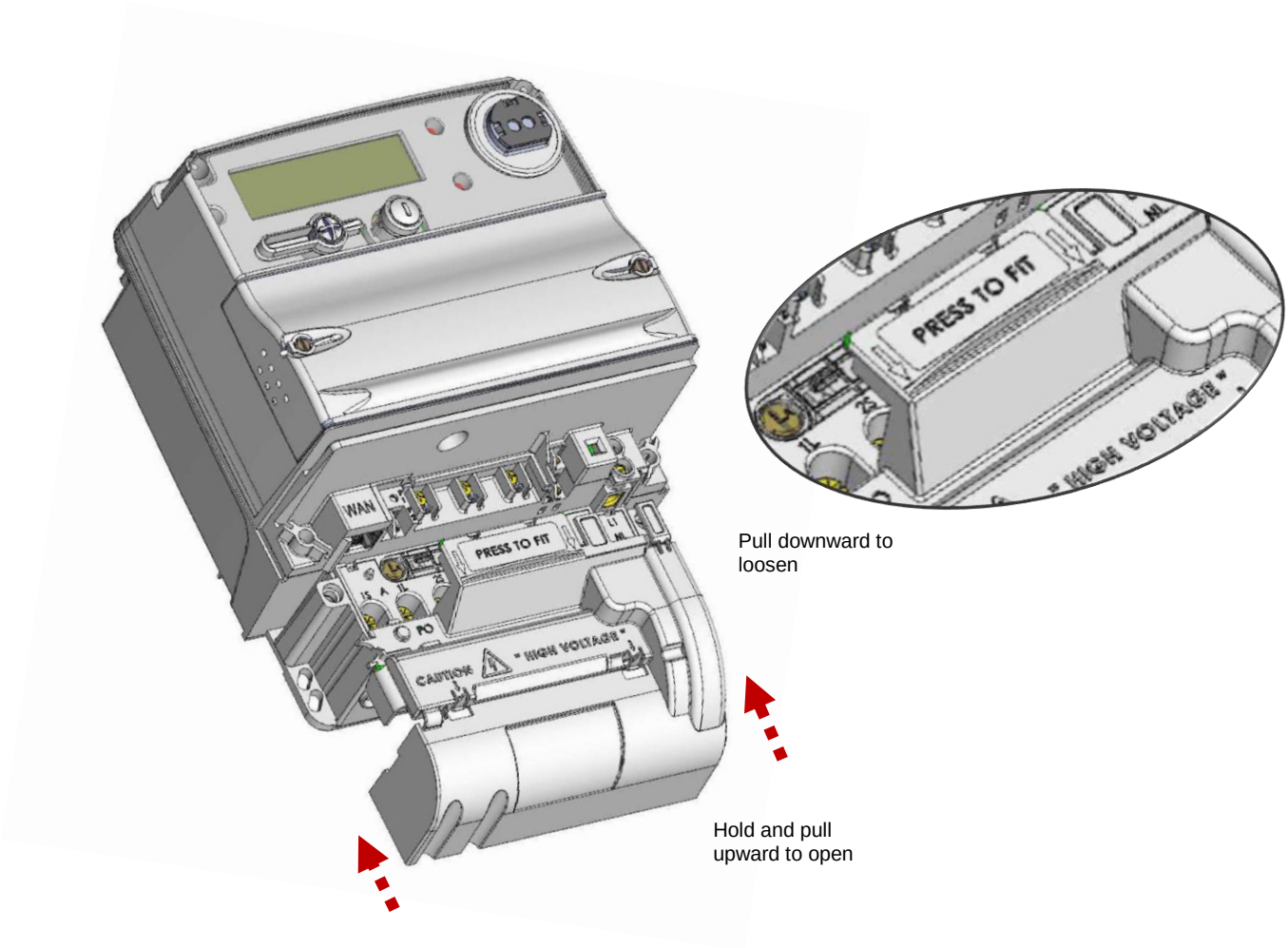

2 Next pull the cover at the side walls in upward direction to dismantle completely.

Follow these instructions to fix the secondary terminal cover.

1 Slide the secondary terminal cover along the side walls of the terminal block. Refer to the figure below.

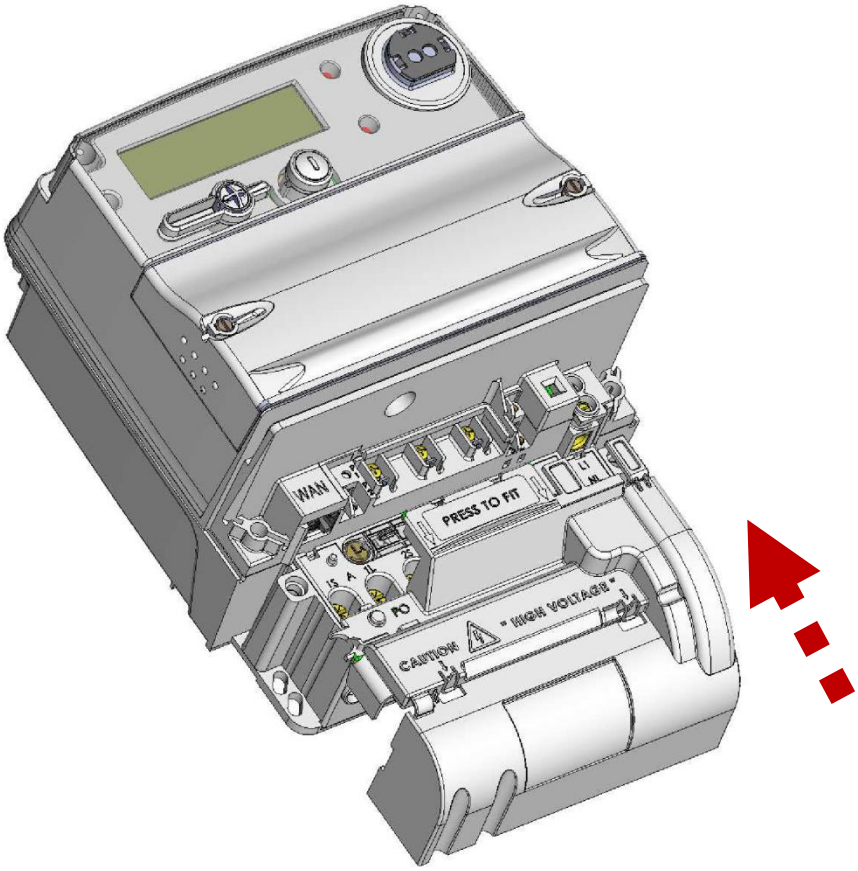

2 Position the snaps on the secondary cover such that they fit inside the two locking tabs on the terminal block. Refer to the figure below.

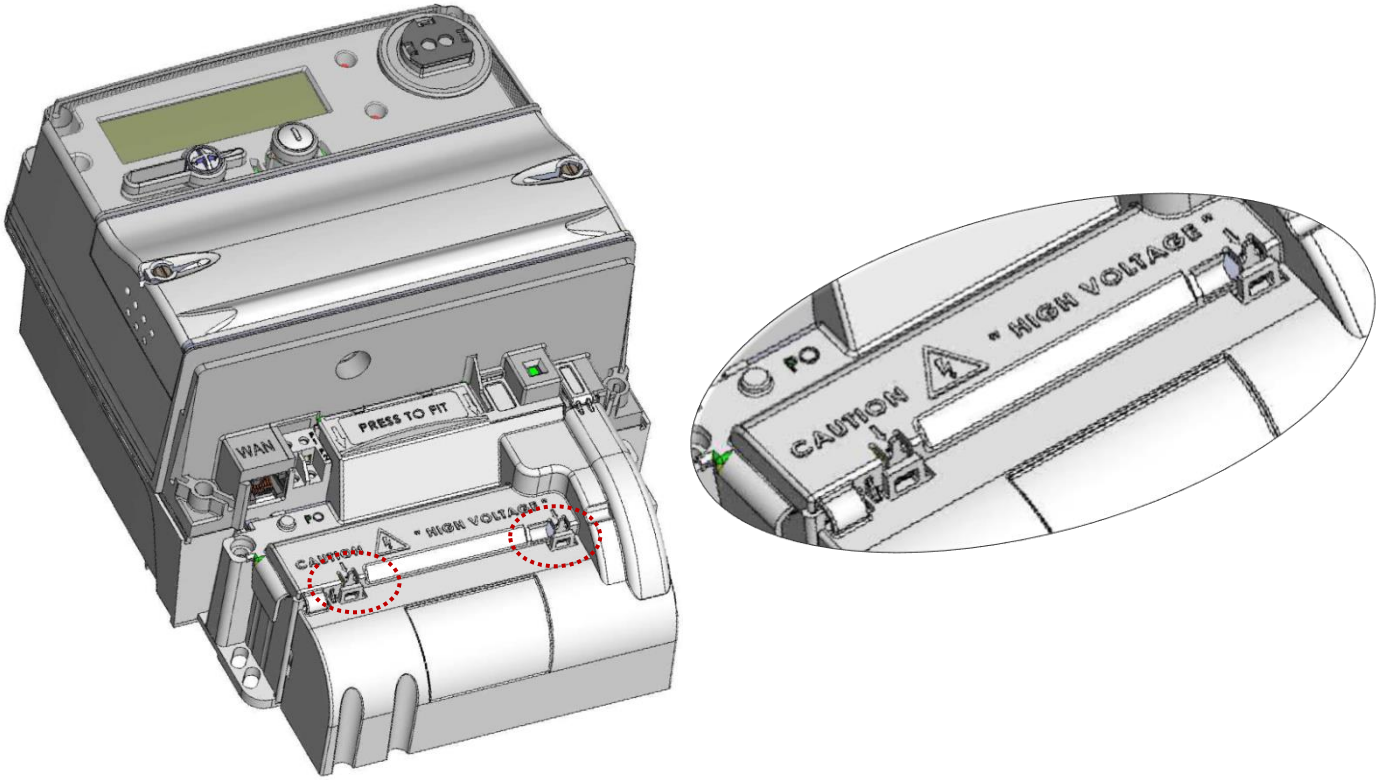

3 Apply sufficient force to fix the snaps within the tab openings and also ‘Press to Fit’ at the indicated area. Refer to the figure below.

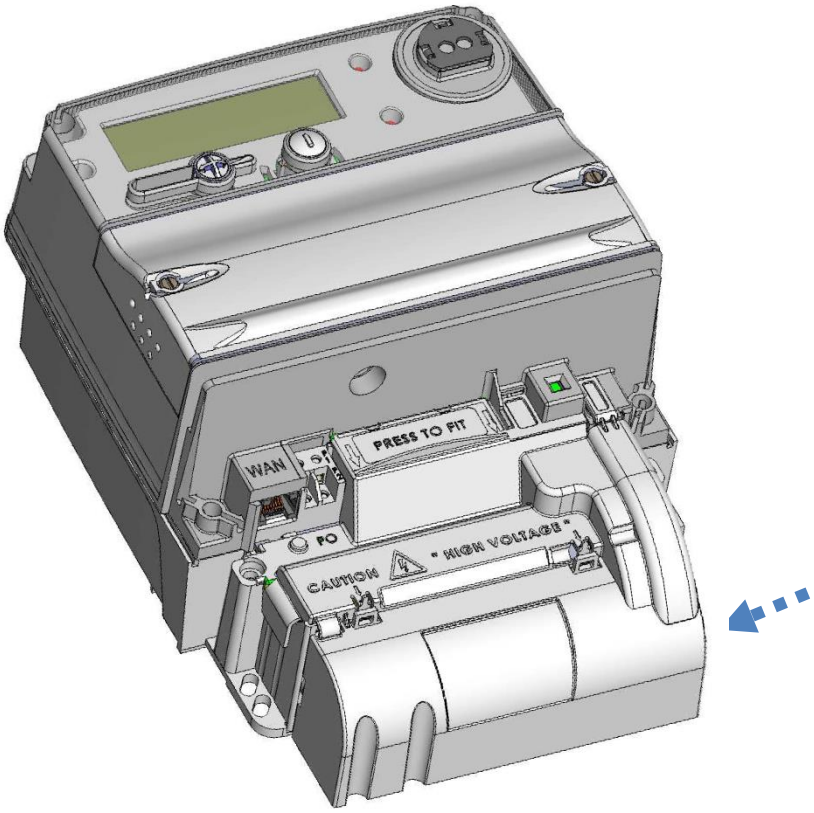

TIPS:

Securing the snaps in the openings may require some extra force. While doing this, it may be good to hold the cover in place around the side walls.

5 Notes

BGX701-076

www.securemeters.com